HKTA 2011
ISSUE 6
MAY 2010

NETWORK CONNECTION SPECIFICATION FOR CONNECTION OF CUSTOMER PREMISES EQUIPMENT (CPE) TO DIRECT EXCHANGE LINES (DEL) OF THE PUBLIC SWITCHED TELEPHONE NETWORK (PSTN) IN HONG KONG

OFTA
電訊管理局

TELECOMMUNICATIONS AUTHORITY
HONG KONG

FOREWORD

1. This specification is issued pursuant to Section 32D of the Telecommunications Ordinance (Cap. 106). This specification sets out the technical requirements for connection of customer premises equipment (CPE) to the direct exchange lines (DEL) of the Public Switched Telephone Network (PSTN) in Hong Kong.

2. DEL may be provided by any one of the Fixed Telecommunications Network Services (FTNS) operators in Hong Kong. CPE should comply with this specification for connection to the DEL provided by the FTNS operators. The general technical characteristics of the FTNS networks are given in HKTA 2201. Supplementary information on network characteristics and services of the FTNS networks may be obtained direct from the operators. Contact information of the FTNS operators can be found in the information note OFTA I 412.

3. At present, the Office of the Telecommunications Authority (OFTA) operates a **H**ong **K**ong **T**elecommunications Equipment **E**valuation and **C**ertification ("HKTEC") scheme. Details of the scheme can be found in the information note OFTA I 421. Under the scheme, suppliers or manufacturers may apply for certification of their customer premises equipment against this specification. The application procedures for certification of customer premises equipment can be found in the information note OFTA I 412. A label prescribed by the Telecommunications Authority (TA) may be affixed to the certified equipment. Details of the labelling arrangement can be found in the Standardisation Guide HKTA 3211.

4. The TA may amend any part of this specification as and when he deems necessary.

5. In case of doubt about the interpretation of this specification, the methods of carrying out the test and the validity of statements made by the manufacturers of the equipment, the decision of the TA shall be final.

6. The TA accepts no responsibility for the satisfactory performance of the CPE connected to the public telecommunications networks. The CPE is not normally evaluated against performance, reliability or quality-of-service parameters.

7. The HKTA specifications and information notes issued by the TA can be downloaded from OFTA's website at http://www.ofta.gov.hk. Enquiries about this specification can be directed to:

Senior Telecommunications Engineer
Standards Section
Office of the Telecommunications Authority
29/F Wu Chung House
213 Queen's Road East
Wanchai
Hong Kong

Fax: +852 2838 5004
Email: standards@ofta.gov.hk

AMENDMENT TABLE

Item	Issue No.	Paragraph	Descriptions
1.	Issue 2	Foreword Para. 2 -5, Para 7 (new)	Update contact information for FTNS operators and for OFTA. Add information for the HKTEC Scheme. Add new para. 7 and re-number original para. 7-8.
2.	Issue 2	Para. 1.4 to 1.6 (old)	Delete original para. 1.4 to 1.6.
3.	Issue 2	Para. 2.2	Rewrite para. 2.2 to refer to HKTA 2001 on electrical safety requirement.
4.	Issue 2	Para. 3.4	Clarify requirement for outband power limit.
5.	Issue 2	Para. 3.5	Amend Figure 1 for 2-wire CPE connection to Master Line Socket.
6.	Issue 2	Para. 3.6	Add note for 3-wire CPE. Amend Figure 2 for 3-wire CPE connection to UK type socket.
7.	Issue 2	Para. 3.9 (new)	Add new para. 3.9 to replace contents in original para. 9. Amend the characteristics of ringing signal.
8.	Issue 2	Para. 4	Merge old paragraphs 4.1 and 4.2 under paragraph 4.
9.	Issue 2	Para. 5.1	Amend information for plug and socket. Replace original Figure 4 by Figures 4a and 4b. Add new Figures 5a and 5b for RJ plug and RJ/UK dual-jack socket. Add new Figure 6c for CPE in parallel connection with RJ sockets.
10.	Issue 2	Para. 6	Delete note.
11.	Issue 2	Para. 7	Amend para. 7.3.1 to clarify power limit for sending of voice. Add new paragraph 7.5 on return loss of CPE and 7.6 on transmission performance for multi-line or switching CPE.
12.	Issue 2	Para. 8.2	Amend description for audible tones. Delete reference to Appendix 1 and refer to HKTA 2201.
13.	Issue 2	Para. 8.4	Clarify requirement for CPE using loop disconnect signalling.
14.	Issue 2	Para. 8.6 - 8.7 (new)	Add new para. 8.6 on clear signal to PSTN and new para. 8.7 on support of supplementary network services.
15.	Issue 2	Para. 9 (old)	Delete original para. 9 (refer to new para. 3.9).
16.	Issue 2	Para. 10 - 12 (old)	Re-number as para. 9 - 11.
17.	Issue 2	Para. 10 (new)	Add a number of reference documents.
18.	Issue 2	Appendix 1	Delete original information for tone plan and add reference information for return loss of CPE.
19.	Issue 2	Appendix 2 (new)	Add reference information for transmission performance of multi-line or switching CPE.
20.	Issue 2	Annex 1 (new)	Add new Annex 1 for reference technical guidelines for conducting evaluation test against HKTA 2011
21.	Issue 3	Foreword	Certification and labelling arrangements are updated.

Item	Issue No.	Paragraph	Descriptions
22.	Issue 4	Para. 3.6	The details of the 3-wire CPE for connection to the UK type master line socket are deleted.
23.	Issue 4	Para. 5.1.1	The cessation dates of the installation of the new UK type socket and RJ/UK dual-jack socket are specified. A new RJ socket for connection of the CPE is added. A new diagram for the details of the RJ socket is included.
24.	Issue 4	Para. 5.1.1 Para. 5.1.3	The details of the 3-wire parallel connection are deleted.
25.	Issue 5	Para. 2.2 Para. 10	The title of HKTA 2001 is updated.
26.	Issue 5	Para. 8.6	The re-answer supervision timing in the Note is updated to refer to the requirement specified in HKTA 2201.
27.	Issue 6	Foreword Annex 1, para. 1	Update information on certification and labelling as a result of the accreditation of Certification Bodies (CBs).
28.	Issue 6	Para. 5.1.1 Para. 10	Reference to the standard on mechanical requirements of RJ plugs is changed from FCC Part 68 to TIA-968-A or TIA-1096-A. TIA-1096-A is added as a reference standard on the contact requirements of RJ plugs in addition to TIA TSB-31-B..
29.	Issue 6	Para. 8.2	Change “ringback tone” to “ringing tone” to tally with the term used in HKTA 2201 titled “General Technical Characteristics of Fixed Telecommunications Networks in Hong Kong”.
30.	Issue 6	Para. 10	Add TIA-1096-A as a new reference document.
31.	Issue 6	Annex 1, para. 2.3	Update the requirements for psophometer, bandpass filter and spectrum analyzer.
32.	Issue 6	Annex 1, para. 3.11 - 3.13	Clarify the purposes of the tests.
33.	Issue 6	Annex 1, para. 3.13	Amend the text for the test state to clarify that music-on-hold, pre-recorded message (whether or not stored in the CPE), etc. may be used to simulate live voice.
34.	Issue 6	Annex 1, para. 3.14	Amend the text in the *Measurement* and *Verdict* parts to clarify that the instantaneous peak signal power is to be measured.

CONTENTS

1. INTRODUCTION

2. ELECTRICAL SAFETY

3. THE IDLE STATE CONDITION

4. OFF HOOK D.C. CHARACTERISTICS

5. INTERCONNECTION

6. KEYPAD LAYOUT

7. TRANSMISSION REQUIREMENTS

8. SIGNALLING

9. NUMBER TRANSLATION

10. REFERENCES

11. TERMINOLOGY

Appendix 1 - Return Loss of CPE

Appendix 2 - Transmission Performance for Multi-line or Switching Equipment

Annex 1 - Technical Guide for Conducting Evaluation Test against HKTA 2011

1. INTRODUCTION

1.1 This specification covers the technical requirements for customer premises equipment (CPE) to be connected to the direct exchange lines (DEL) of the Public Switched Telephone Network (PSTN) in Hong Kong.

1.2 DEL include the following types of exchange line to be provided by the network operators:

(a) bothway line;
(b) incoming only line;
(c) outgoing only line; and
(d) hunting line.

1.3 CPE is the wire-line equipment installed at the premises of a customer and to be connected to the PSTN for telecommunications services. Examples of CPE are:

(a) Single-Line CPE

(i) telephone;
(ii) fax machine;
(iii) dial-up modem;
(iv) answering machine; and
(v) recording machine.

(b) Multi-line CPE

(i) voice response system;
(ii) PABX system; and
(iii) key telephone system.

2. ELECTRICAL SAFETY

2.1 PRINCIPLE OF PROTECTION

In order to safeguard operating personnel, users, and plant, it is essential to prevent the transmission of excessive voltages from the CPE into the public telecommunications network in Hong Kong.

2.2 SAFETY REQUIREMENTS

The CPE shall comply with specification HKTA 2001 titled “Compliance Test Specification - Safety and Electrical Protection Requirements for Subscriber Telecommunications Equipment” issued by the Telecommunications Authority (TA).

3. IDLE STATE CONDITION

3.1 GENERAL

The idle state condition of the CPE is equivalent to the on-hook state.

3.2 BLEED CURRENT

The CPE shall draw not more than 30 μA when supplied by a 48V d.c. source connected to a 1850 Ω resistor. This bleed current is the designed current drain intended to charge cells or power on-hook facilities such as memories. It is distinct from unintentional leakage currents due to insulation resistance limits.

Note : The network operators cannot guarantee that it will be possible in all present or future circumstances to supply 30 μA from the PSTN.

3.3 INSULATION RESISTANCE

The insulation resistance of the CPE shall not be less than 5 MΩ when tested with a 80V d.c. between the A and B wires (or called "tip" and "ring" respectively), and between any of these connecting wires and earth. Test shall be conducted with the bleed circuit disconnected.

3.4 POWER LEVEL IN ON-HOOK STATE

The total noise power level of the equipment during on-hook state shall be less than -65 dBmp measured across the DEL interface (i.e. the A and B wires) with 600 Ω non-reactive terminating impedance. The root-mean-square (RMS) voltage averaged over 100 ms and measured across the DEL interface shall meet the limits given in Table 1 below. No intelligible signals shall be transmitted from the CPE to the exchange line in on-hook state.

Table 1

Centre Frequency (f) of 8 kHz Band (kHz)	Maximum Voltage in All 8 kHz Bands (dBV)	Terminating Impedance (Ω)
8 to 12	- (6.4 + 12.6 log f)	300
12 to 90	23 - 40 log f	135
90 to 266	- 55	135

Where f = centre frequency in kHz of each of the possible 8 kHz bands beginning at 8 kHz.

3.5 CAPACITANCE PRESENTED BETWEEN A-WIRE AND B-WIRE

For CPE with 2-wire operation as shown in Figure 1, the capacitance of single-line CPE presented to the exchange line A and B wires shall not exceed 1 μF. The capacitance of multi-line CPE presented to the exchange line A and B wires shall not exceed 4 μF.

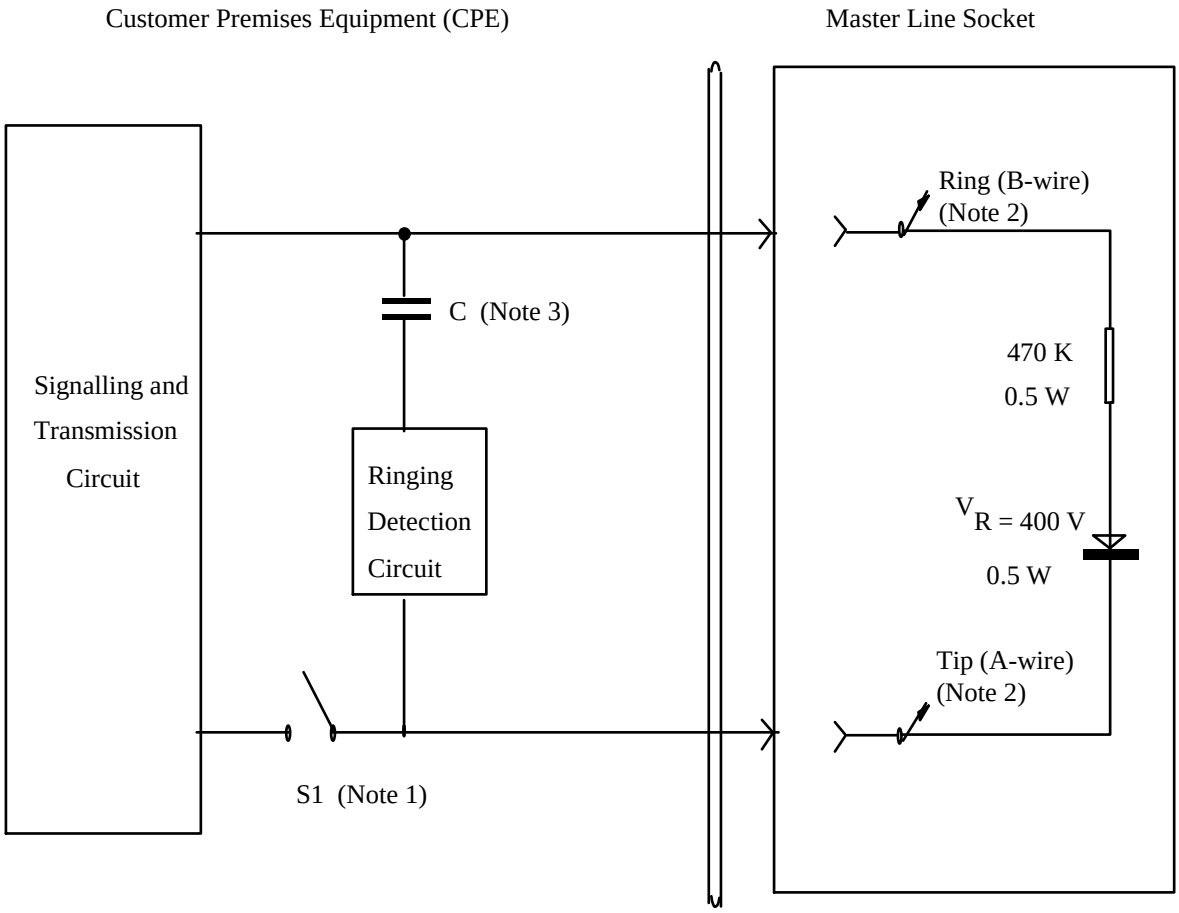

Notes :
1. Hookswitch S1 is closed during "off-hook".
2. A-wire and B-wire terminals of the Master Line Socket are connected to the exchange line.
3. Capacitance C of the CPE shall not exceed 1 μF for single-line CPE and 4 μF for multi-line CPE.

Figure 1 : 2-Wire CPE for Connection to Master Line Socket

3.6 VOICE-BAND IMPEDANCE IN ON-HOOK STATE

In on-hook state, the impedance of the CPE presented to the A and B wires in the frequency range 300 to 3400 Hz shall not be less than 10 kΩ.

3.7 RINGING IMPEDANCE

The CPE may be provided with a ringing signal detection circuit. The impedance modulus of the ringer (excluding the d.c. blocking capacitor) shall not be less than 6 kΩ at 25 Hz for single-line CPE and shall not be less than 3 kΩ at 25 Hz for multi-line or switching CPE.

3.8 RINGING DETECTION

The sensitivity of ringing signal detection circuits shall be such that the CPE shall respond to the ringing signal with voltage 75 ± 20 V rms and within frequency range between 20 Hz and 28 Hz superimposed on -40 to -48 V d.c. by considering the exchange line loop resistance of 0 to 1 kΩ and the ringing impedance of the CPE. Technical characteristics of the ringing signal(s) used in Hong Kong should be referred to HKTA 2201.

4. OFF-HOOK D.C. CHARACTERISTICS

In off-hook (seizure, answer, tone dialling, pulse-make period or conversation) state, the CPE shall present a d.c. loop circuit to the DEL and this is known as the seizure loop circuit. The voltage to current characteristics of the seizure loop circuit shall conform to the limits shown in Figure 2. The limits shall also apply to the telephone with attached auxiliary equipment, and to the equipment not associated with ordinary telephone.

Note : In order to ensure proper working of the CPE in low line current condition under long exchange line loop, it is recommended that the CPE should be able to operate with line current down to 18 mA.

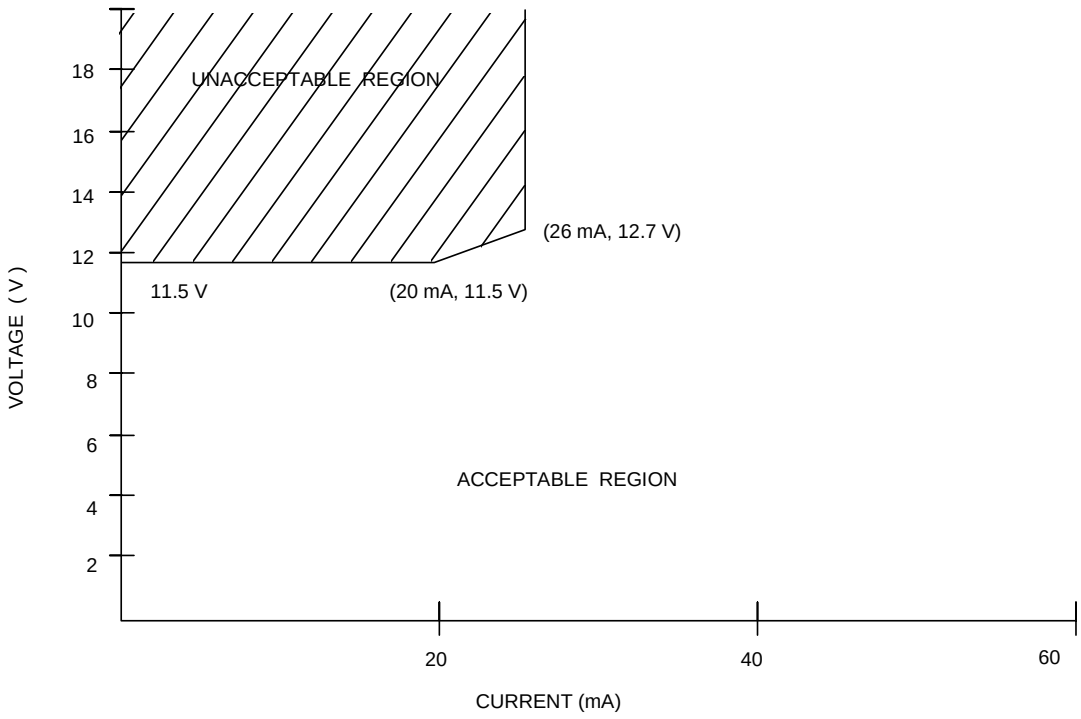

Figure 2 : Off-Hook D.C. Characteristics

5. INTERCONNECTION

5.1 SINGLE-LINE CPE CONNECTION

5.1.1 Modular Plug and Socket

(a) The network operator will provide a modular socket as the Interconnect Point (IP) between the single-line CPE and the network. The standard types of socket provided in Hong Kong are as follows:

Standard UK type socket

The standard UK type socket provides a UK type jack for connection of CPE equipped with UK type plug. Details of the standard UK modular plug and socket for single-line interface are shown in Figures 3a and 3b. The same modular socket is compatible with 2-wire connection as described above in Figure 1.

Note: The network operator will cease installing the UK type sockets after 1 February 2004.

Standard RJ/UK dual-jack socket

The standard dual-jack socket provides a UK type jack and an RJ-45 jack. Details of the dual-jack socket are illustrated in Figures 4a and 4b. The UK jack is compatible with 2-wire connection as described in Figure 1 for CPE equipped with UK plug. The RJ-45 jack is compatible with CPE equipped with either RJ-11 plug (6-position) or RJ-45 plug (8-position).

Note: The network operator will cease installing the RJ/UK dual-jack sockets after 1 August 2004.

Standard RJ socket

The standard RJ socket provides an RJ-45 jack. Details of the socket are illustrated in Figures 5a and 5b. The RJ-45 jack is compatible with CPE equipped with either RJ-11 plug (6-position) or RJ-45 plug (8-position).

Note: The network operators may supply other optional types of telephone sockets, such as sockets with more than one RJ-45 jack to meet the service demand of customers.

(b) The CPE shall provide modular plug for connection and disconnection to the socket provided by the network operator.

Note: Hong Kong has implemented a plan for transition of the plug and socket system from UK type to RJ type. Both RJ and UK sockets will certainly co-exist during the transition as operators will take time for the socket replacement. Suppliers may offer single-line CPE using DEL with UK plug or RJ plug to cater for the market need and demand during the transition. To help reduce the potential connection problem, CPE

suppliers are encouraged to provide their customers with appropriate UK-RJ adaptors or other means for plug conversion. However, in order to promote the use of the RJ system, the CPE seeking the certification after 1 February 2004 is required to meet the RJ plug requirement.

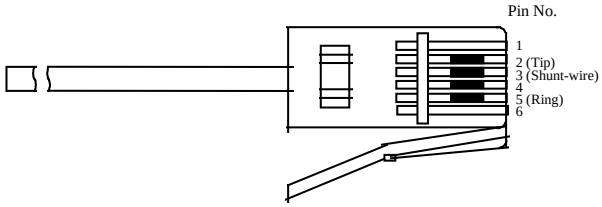

UK Type Modular Plug with Cord

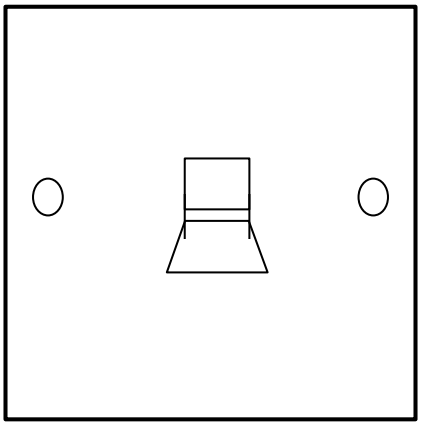

Standard UK Type Socket

Note : Plugs should conform to specification BS6312:1982. In addition, the following requirements must be complied with:

a. Minimum plating on all contacts of plugs to be 2.5 micron of gold over 3 micron of nickel, over base metal.
b. Ductility of the nickel undercoat plating should be well controlled so that there should be no cracking on the plating surfaces which could cause exposure of the substrate with sequential corrosion problems under extremely adverse environmental conditions.

Figure 3a : Standard UK Modular Plug and Socket

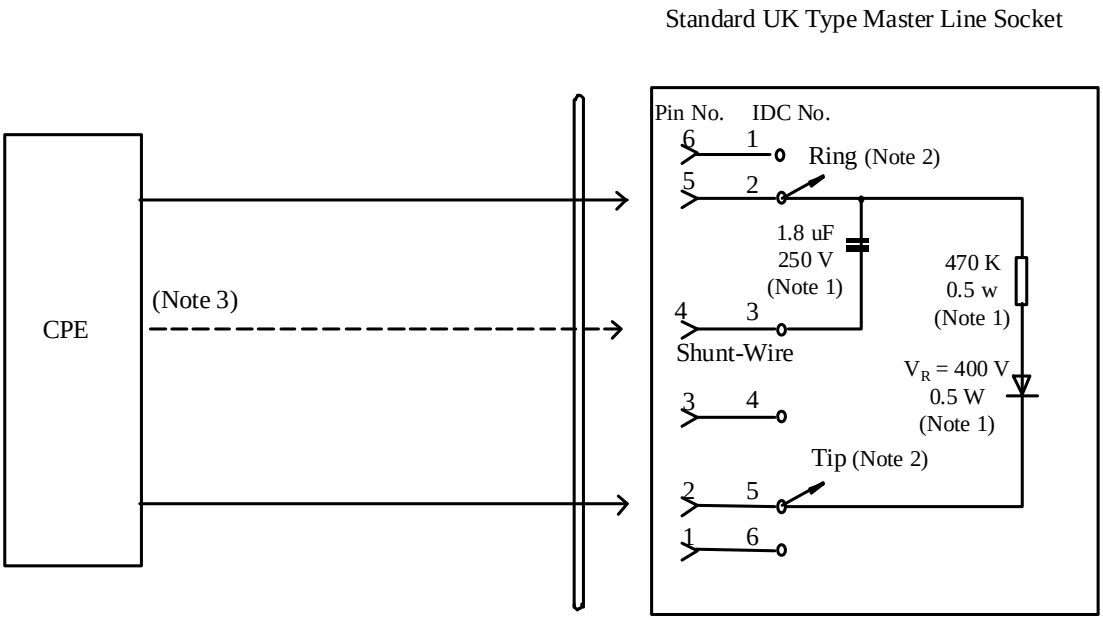

Note: 1. The diode-resistor test circuit and the 1.8 μF capacitor are only incorporated in the master line socket.
2. Terminals 2 and 5 of master socket are connected to the exchange line.
3. Shunt-wire may be used from the CPE to the socket for 3-wire operation. This approach is not recommended.

Figure 3b : Details of Standard UK Type Master Line Socket

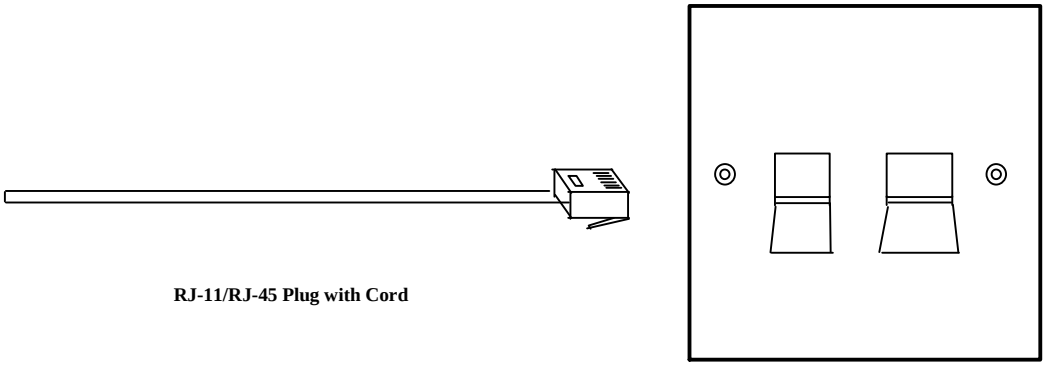

RJ-11/RJ-45 Plug with Cord

Dual-jack Socket
(with one RJ-45 jack and one UK jack)

Note: 1. For connection to the RJ-45 jack, the CPE should be provided with either RJ-11 (6-position) plug for 2-wire operation or RJ-45 (8-position) plug for 4-wire operation.
2. The RJ plugs should conform to the mechanical requirements as specified in TIA-968-A or TIA-1096-A. The hard gold contacts or contacts using alternative materials shall conform to the requirements of TIA TSB-31-B or TIA-1096-A.

Figure 4a : RJ plug and Standard RJ/UK Dual-Jack Socket

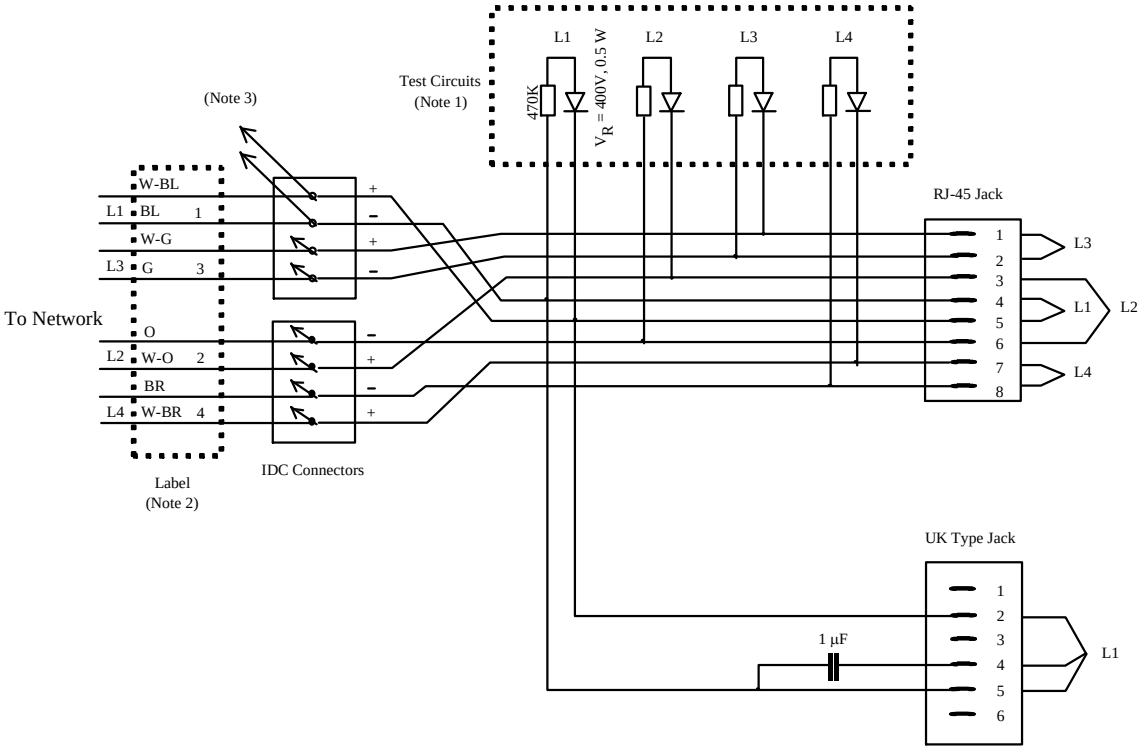

Dual-jack Socket with RJ-45 and UK Jacks

Note: 1. The diode-resistor test circuits are only incorporated in the master line socket.
2. The IDC connectors are labelled by numbers (1, 2, 3, 4) and colours (W=White, BL=Blue, O=Orange, G=Green, BR=Brown) for pair and polarity identification.
3. For sequential extension of unshielded twisted pair (UTP) wires from one socket to another.
4. The jack pin/pair assignment of a RJ socket is referred to designation T568A defined in TIA/EIA-568-B.1.
5. For Plain Old Telephone Service (POTS), L1 should be used.
6. For broadband services such as Ethernet, L2/L3 should be used.

Figure 4b : Details of Standard RJ/UK Dual-Jack Socket

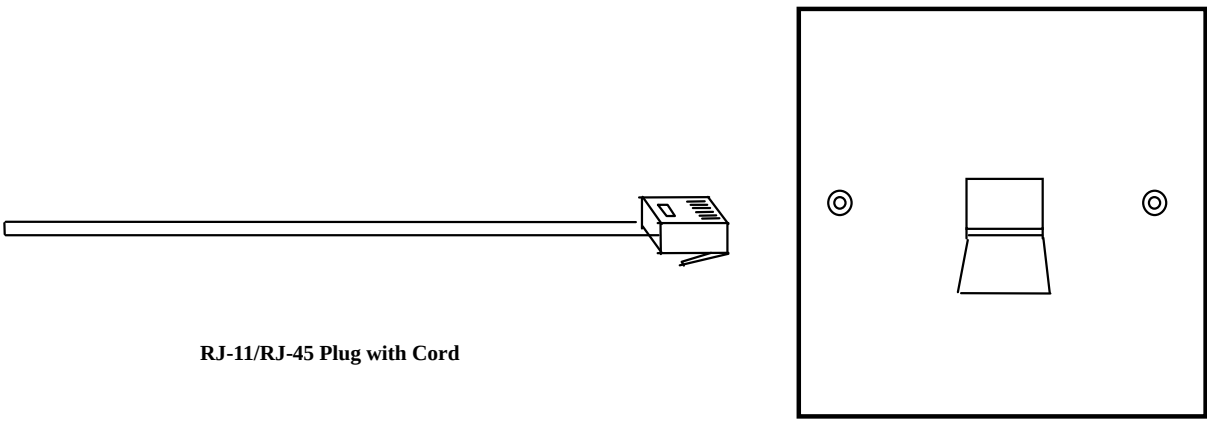

Note: 1. For connection to the RJ-45 jack, the CPE should be provided with either RJ-11 (6-position) plug for 2-wire operation or RJ-45 (8-position) plug for 4-wire operation.

2. The RJ plugs should conform to the mechanical requirements as specified in TIA-968-A or TIA-1096-A. The hard gold contacts or contacts using alternative materials shall conform to the requirements of TIA TSB-31-B or TIA-1096-A.

Figure 5a : RJ plug and Standard RJ Socket

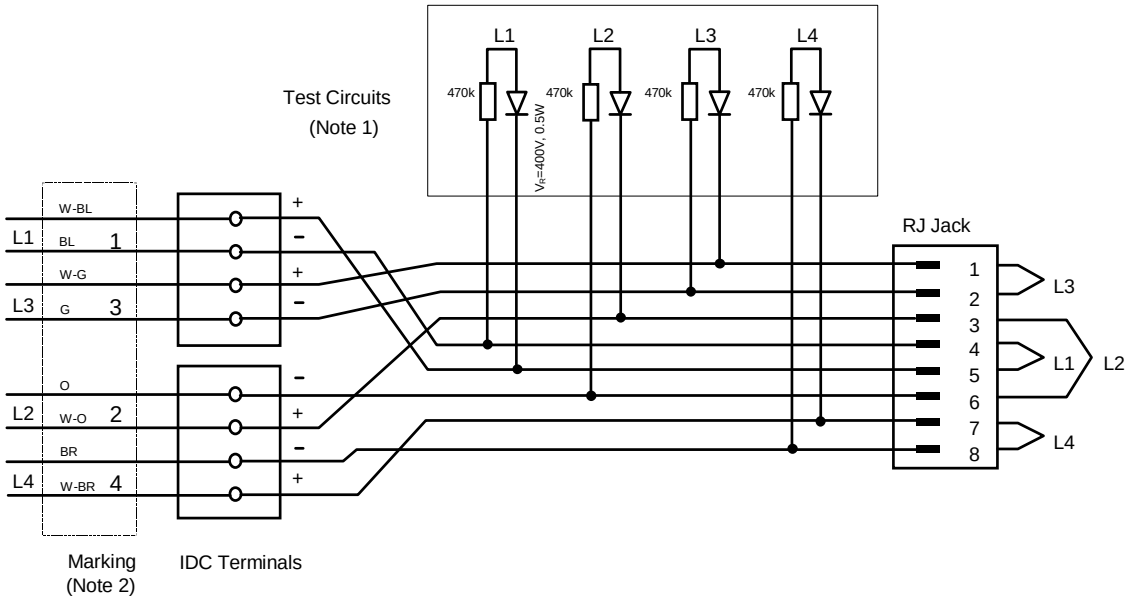

Note: 1. The diode-resistor test circuits are only incorporated in the master line socket.

2. The IDC terminals are labelled by numbers (1, 2, 3, 4) and colours (W=White, BL=Blue, O=Orange, G=Green, BR=Brown) for pair and polarity identification.

3. For sequential extension of unshielded twisted pair (UTP) wires from one socket to another.

4. The Jack pin/pair assignment of a RJ socket is referred to designation T568A defined in TIA/EIA-568-B.1.

5. For Plain Old Telephone Service (POTS), L1 should be used.

6. For broadband services such as Ethernet, L2/L3 should be used.

Figure 5b : Details of Standard RJ Socket

5.1.2 Parallel Extensions

Not more than four CPE with ringing signal detector shall be connected to the same exchange line. In addition, not more than one item of non-speech CPE (e.g. modem, facsimile machine, etc.) should be connected in parallel to one exchange line.

5.1.3 Connection of Ringing Detector

For CPE with 2-wire parallel connections shown in Figure 6a and Figure 6b, only A-wire and B-wire are needed to run from Master unit to Secondary unit.

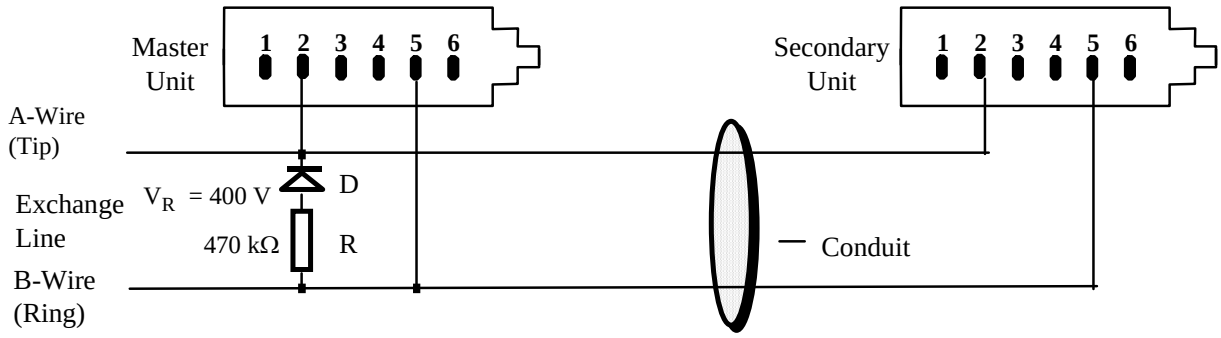

Figure 6a : 2-Wire CPE in Parallel Connection with 2 UK Type Sockets

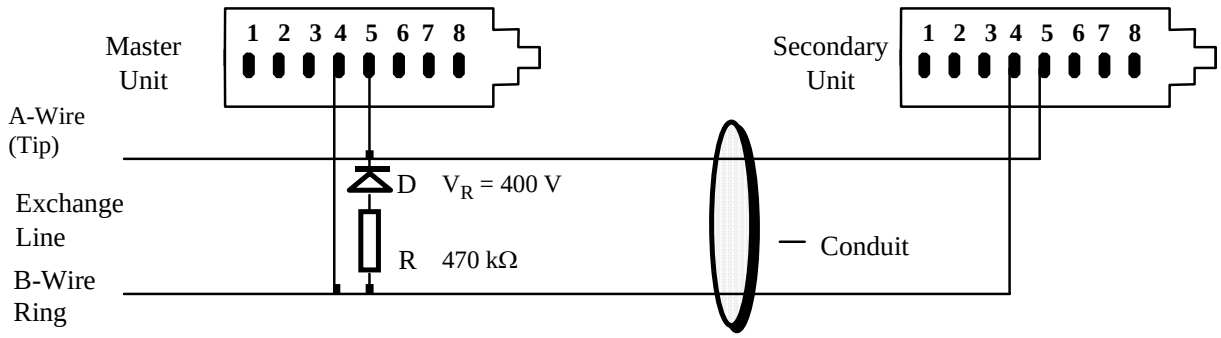

Figure 6b : 2-Wire CPE in Parallel Connection with 2 Sockets with RJ-45 Jack

5.2 MULTI-LINE INTERCONNECTION

For the connection of multi-line CPE, hard-wire termination is usually employed in lieu of modular plugs and sockets. The network operator will provide an Interconnect Point (IP) between the CPE and the network. All wiring within the IP (e.g. Interface Disconnection Box with Krone strips) will be connected and disconnected by the network operator. The supplier/agent of the CPE will provide the cabling to the CPE side of the IP.

6. KEYPAD LAYOUT

For CPE using DTMF signalling, the keypad layout of the CPE for keying the telephone number shall comply with ITU-T Recommendation E.161. The layouts are reproduced below.

(a) Layout of keypad with numeric keys only

1	2	3
4	5	6
7	8	9
*	0	#

(b) Layout of keypad with alphanumeric keys

1	2 ABC	3 DEF
4 GHI	5 JKL	6 MNO
7 PQRS	8 TUV	9 WXYZ
*	0	#

7. TRANSMISSION REQUIREMENTS

7.1 GENERAL

The PSTN has a nominal pass-band of 300 to 3400 Hz, with a nominal 600 Ω non-reactive terminating impedance. No d.c. potential shall be transmitted from the CPE to the DEL.

7.2 DIRECTLY CONNECTED TONE TRANSMISSION EQUIPMENT

7.2.1 For continuous tone signals whose normal activity time is in excess of 30 seconds in one minute (e.g. data or facsimile transmission), the power level of transmitted signals in any 10 Hz band within the frequency range 0 to 4 kHz shall not exceed the limit shown in Figure 7, when measured across the DEL interface of the CPE which is connected to a test circuit with a 600 Ω non-reactive terminating impedance and d.c. line current of 20 to 100 mA.

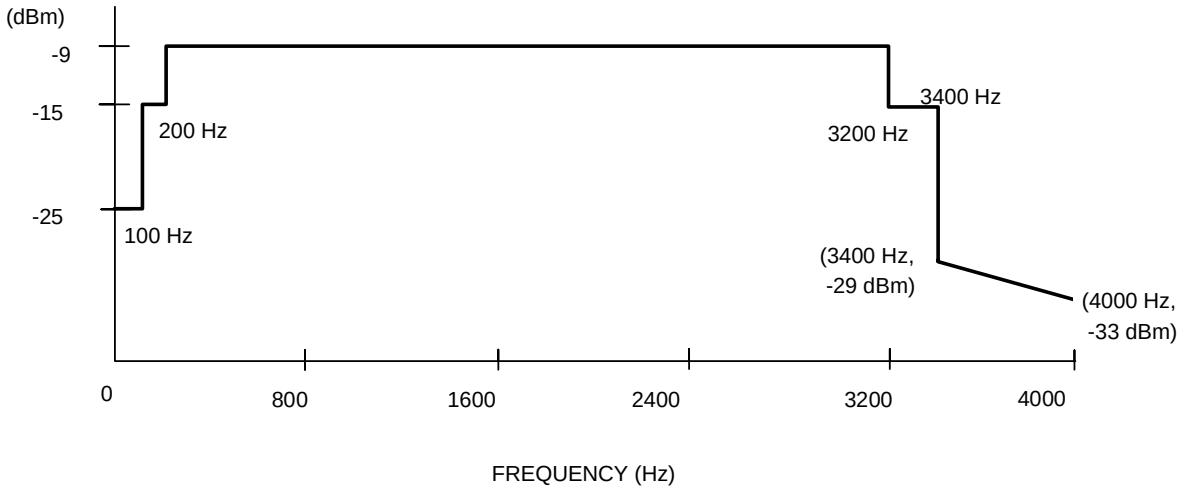

Figure 7 : In-Band Maximum Power Level

7.2.2 For non-continuous tone signals which have an activity time of 30 seconds or less in one minute, the total power level of transmitted signals in any 10 Hz band within the frequency range 0 to 4 kHz shall not exceed the limit shown in Figure 7 above except that the limit in frequency range 200 to 3200 Hz is relaxed to a level of -5 dBm, when measured across the DEL interface of the CPE which is connected to a test circuit with a 600 Ω non-reactive terminating impedance and d.c. line current of 20 to 100 mA.

7.2.3 All controls for adjusting the send power shall be provided inside the CPE and shall not normally be tampered with by users.

7.3 VOICE TRANSMISSION EQUIPMENT

7.3.1 The requirements in the clauses 7.3.2 to 7.3.4 deal with speech equipment. Elements of such equipment may have tone transmission facilities. In these cases the equipment shall also comply with requirements for tone transmission in clause 7.2.

7.3.2 The power level of transmitted signals in any 10 Hz band within the frequency range 300 Hz - 4 kHz delivered to the exchange line by the CPE, when averaged over any 3-second intervals, shall not exceed -9 dBm when measured across the DEL interface of the CPE which is connected to a test circuit with a 600 Ω non-reactive terminating impedance and d.c. line current of 20 to 100 mA.

7.3.3 All controls for adjusting send power shall be provided inside the CPE and shall not normally be tampered with by users.

7.3.4 Acoustically coupled devices used for secondary control where signal activity is low and does not persist for long periods, for example used for message retrieval from answering and recording system, shall be designed to ensure that the instantaneous peak signal power transmitted to the network does not exceed 0 dBm.

7.4 OUT-BAND POWER LIMITS

The individual spectral components of all transmitted signals shall not exceed the limits shown in Table 1.

7.5 RETURN LOSS

Reference information on the return loss of the CPE can be found in Appendix 1. The return loss does not constitute part of the CPE requirements for connection to DEL.

7.6 TRANSMISSION PERFORMANCE FOR MULTI-LINE OR SWITCHING EQUIPMENT

Reference information on the transmission performance for multi-line or switching equipment can be found in Appendix 2. The transmission performance does not constitute part of the CPE requirements for connection to DEL.

8. SIGNALLING

8.1 ACCESS TIME

Dialling may commence as soon as dial tone from PSTN is present. Automatic dialling devices shall either incorporate a dial tone detector which is compatible with the dial tone in clause 8.2 or apply a delay period of not less than 1 second between the seizure of DEL and the commencement of dialling.

Note: In order to avoid unnecessary delay, CPE incorporating a reliable dial tone detector may commence dialling as soon as dial tone is detected.

8.2 AUDIBLE TONES

Technical characteristics of the audible tones used in Hong Kong should be referred to HKTA 2201.

The characteristics of the frequencies and cadences of audible tones transmitted from the CPE to the PSTN shall be distinct from the five basic supervisory tones described as follows:

(i) Dial Tone

When the calling party initiates a call to the exchange, dial tone is returned as soon as the exchange equipment is in a state ready to receive the incoming dialling signals. The dial tone is removed as soon as the exchange receives the first dial digit.

(ii) Ringing Tone

When the wanted connection is established to the called party's line and the line is free to receive calls, the ringing tone is returned to the calling party.

(iii) Busy Tone (Customer Busy)

Busy tone is returned to the calling party when a call is attempted to a line which is engaged or in a "locked-out" condition.

(iv) Congestion Tone (Network Busy)

Congestion tone is returned to the calling party when the exchange equipment is busy.

(v) Number Unobtainable (NU) Tone

Number unobtainable tone is returned to the calling party to indicate that the called number is:

- out of service; or
- a spare code or number; or
- the access code of a service which is not available to the subscriber, or not accessible due to certain service restrictions.

8.3 LINE POLARITY

The CPE shall be insensitive to exchange line polarity including any change in polarity which may occur during a call.

8.4 LOOP DISCONNECT SIGNALLING

For CPE using loop disconnect signalling, the pulse signals shall comply with the requirements as follows:

(a) During the pulse-break period, there shall be a disconnection resistance of at least 50 kΩ.

(b) During the pulse-make period, the loop circuit of the CPE presented to the exchange line A and B wires should conform to the d.c. characteristics given in clause 4.

(c) Pulsing Performance

The pulse source shall meet the following limits:

(i) pulse repetition rate: 9 to 11 pulses per second.
(ii) pulse break-make ratio: within the range 58% to 72%
(iii) minimum inter-digital pause: 600 ms (including one make period)
(iv) maximum inter-digital pause: 3 seconds

8.5 DTMF SIGNALLING

8.5.1 Signal - Frequencies and Coding

For CPE using DTMF signalling, it shall comply with ITU-T Recommendation Q.23 as follows:

		High group frequency (Hz)			
		1209	1336	1477	1633
Low group frequency (Hz)	697	1	2	3	A
	770	4	5	6	B
	852	7	8	9	C
	941	*	0	#	D

8.5.2 Signalling Requirements

8.5.2.1 The push-button dial shall operate correctly in the presence of precise dial tone.

8.5.2.2 The tone frequencies shall be maintained within ±1.5% of their nominal values, irrespective of different exchange line impedance offered to the push-button dial.

8.5.2.3 The minimum sending levels to the exchange line as a function of the feeding current (20 to 100 mA) with a 600 Ω non-reactive terminating impedance are shown in Figure 8. The maximum sending level of the DTMF signal should not exceed +2 dBm per frequency pair. The level of the higher frequency component of the DTMF signal shall be restricted to 2 ± 2 dB above the level of the lower frequency component (twist level).

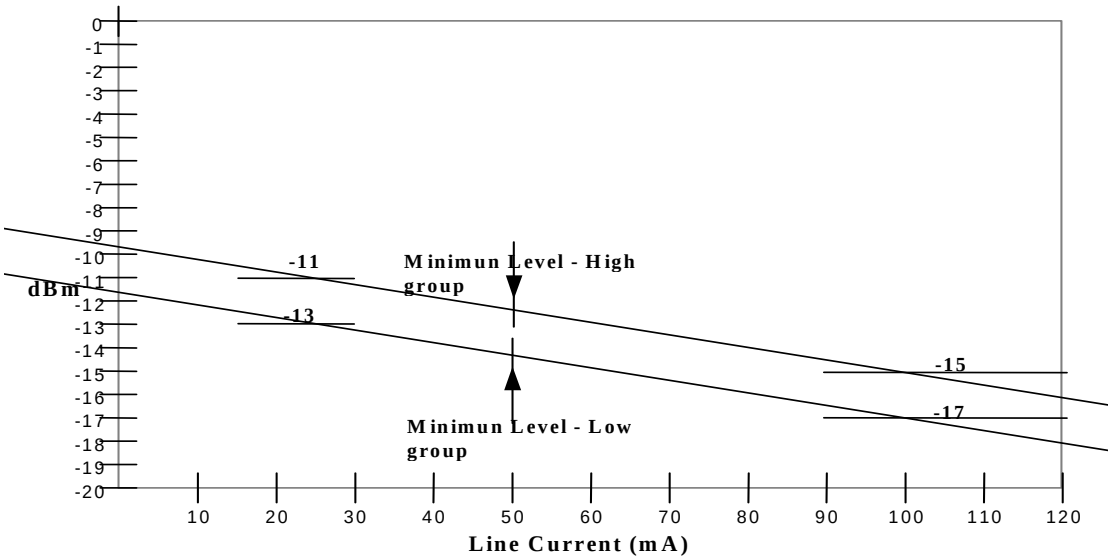

Figure 8 : DTMF Signal Level Limits

8.5.2.4 With no DTMF signal is being sent to PSTN, the total power level of any signal emitted from the push-button dial to the exchange line shall not exceed -70 dBm, when measured with a 600 Ω non-reactive terminating impedance. This condition shall also be met within 10 ms from the time any one button is released.

8.5.2.5 The level of any individual, unwanted frequency component shall not exceed the limits shown in Table 1. From 300 Hz to 4 kHz, the power level of any individual unwanted frequency component shall not exceed -33 dBm, when measured with a 600 Ω non-reactive terminating impedance.

8.5.2.6 The level of each of the two frequency components of the DTMF signal shall reach within 1 dB of the final value with 10 ms from the time that any one button is operated.

8.5.2.7 All push-button DTMF diallers shall meet the following signal timing requirements:

(a) minimum signal duration of 50 ms;
(b) minimum interdigital pause of 50 ms including a minimum steady-state of 45 ms.

8.5.2.8 In addition to clause 8.5.2.7, automatic DTMF diallers shall meet the following requirements:

(a) maximum signal duration of 200 ms;
(b) maximum interdigital pause of 3 seconds;
(c) minimum predigital pause of 1 second;
(d) maximum predigital pause of 10 seconds.

8.5.2.9 The tone output of the push button dial shall be stable enough such that any steady state signal power variation is less than 1 dB.

8.6 CLEAR SIGNAL TO PSTN

The clear signal is given by the CPE to the PSTN for release of a call connection. The clear signal shall be the disconnection of seizure loop (i.e. restoration to on-hook state) for a minimum duration of 1 second.

Note: When the user of the CPE is a called party and re-answer supervision is supported by the network, the release of call connection will be completed when the restoration to on-hook state has been maintained until the expiry of network re-answer supervision timing as specified in HKTA 2201.

8.7 SUPPORT OF SUPPLEMENTARY NETWORK SERVICES

The CPE may incorporate additional facilities to support supplementary network services provided by the network operators. Additional information on network characteristics can be found in HKTA 2201.

9. NUMBER TRANSLATION

9.1 If the CPE is equipped with a number translation device, it shall conform to the following requirements:

(a) the number translation device can be either customer-programmable or non-customer-programmable;

(b) for customer-programmable number translation device, the associated equipment should have clearly labelled keys, buttons, switches or the like, together with user-friendly instructions so that customers, users or service agents may easily program or re-program the input and output numbers by themselves. The associated equipment should be programmed with the input access code **'3000'** or its derivatives **'3000X'** (where **X** is from 0 to 9) at the time of delivery to customer sites so that consumers will be able to identify that the associated equipment functions as a number translation device and to over-ride the number translation function easily; and

(c) for non-customer-programmable number translation device, the associated equipment should be hard-wired with the input access codes **'3000'** or the derivatives '**3000X'** (where **X** is from 0 to 9).

9.2 For number translation device working with PABX or multi-line CPE, there are no requirements on the number translation capabilities of the device so long as the translation is not done after the seizure of an exchange line.

10. REFERENCES

[1] HKTA 2001 - "Compliance Test Specification - Safety and Electrical Protection Requirements for Subscriber Telecommunications Equipment" issued by the Telecommunications Authority.

[2] HKTA 2201 - "General Technical Characteristics of Fixed Telecommunications Networks in Hong Kong" issued by the Telecommunications Authority.

[3] ITU-T P-Series Recommendations on Telephone Transmission Quality

[4] ITU-T Recommendations E.161 - "Arrangement of Digits, Letters and Symbols on Telephones and Other Devices that can be Used for Gaining Access to a Telephone Network"

[5] ITU-T Recommendation Q.23 - "Technical Features of Push-Button Telephone Sets"

[6] BS 6312: 1982 - "Specification for Plugs for Use with British Telecommunications Line Jack Units" issued by British Standards Institution

[7] TIA-968-A "Telecommunication - Telephone Terminal Equipment - Technical Requirements for Connection of Terminal Equipment to the Telephone Network" issued by the Telecommunications Industry Association

[8] TIA TSB-31-B - "Part 68 Rationale and Measurement Guidelines" issued by the Telecommunications Industry Association

[9] TIA-1096-A "Connector Requirements for Connection of Terminal Equipment to the Telephone Network" issued by the Telecommunications Industry Association

11. TERMINOLOGY

Public Switched Telephone Network (PSTN)	Public Switched Telephone Network is formed by telephone systems in which any subscriber can call any other subscriber connected to the network automatically.
Network Operator	A network operator is a company which is authorized or licensed to operate a network providing identified network services to the public.
Exchange line A and B wires	An exchange line has two wires or conductors which are designated “A” and “B” wires or named as Tip and Ring wires respectively.
Off-Hook	The state equivalent to that provided by current standard telephone when the handset is removed from its normal rest ‘idle’ state.
On-Hook	The state equivalent to that provided by current standard telephone when the handset is put in the normal position as on the rest.
Multi-line or Switching CPE	Customer premises equipment (CPE) which are capable of switching/routing of PSTN calls involving more than one exchange line and/or more than one terminating extension.
Single-Line CPE	CPE which are not capable of switching/routing of PSTN calls involving more than one exchange line and/or more than one terminating extension.
Number Translation Device	A number translation device (NTD) is a device which translates an input number via the dialling pad into another number for access to specified destinations/services. It does not include a device which generates a number upon input through a special function key or a combination of special function key and the dialling pad.

- END -

Appendix 1

Return Loss of CPE

The following is reference information about the recommended return loss of CPE.

For better transmission performance , the CPE may be designed with a suitable return loss presented to the DEL against a reference impedance of 600 Ω over the frequency range between 300 Hz and 4000 Hz and measured with d.c. line current of 20 to 100 mA.

Note 1 : Return loss is determined from the following expression:

$$20 \log_{10} \left| \frac{Zr + Zm}{Zr - Zm} \right| \text{ dB}$$

Where Zr is the reference impedance (600 ohm) and Zm is the measured value of impedance of the DEL interface of the CPE at d.c. line current of 20 to 100 mA over the frequency range 300 to 3400 Hz.

Note 2 : It is recommended that the return loss of the CPE as determined by the above expression is greater than 12 dB.

Appendix 2

Transmission Performance for Multi-line or Switching Equipment

The following is reference information about the recommended transmission performance for multi-line or switching equipment.

(a) Transmission Loss

The nominal transmission loss in a PSTN call path between the extension port and the DEL interface of the multi-line or switching equipment including switching loss and extension cabling loss does not exceed 2 dB at a nominal reference frequency in the range 1004 to 1020 Hz, when tested with an input signal of -10 dBm0.

(b) Variation of Loss with Signal Frequency

The variation of transmission loss with signal frequency, relative to the loss at an input signal of -10 dBm0 at the nominal reference frequency in the range 1004 to 1020 Hz, conforms to the limits shown below. The symbol "+" denotes more loss; the symbol "-" denotes less loss than measured at the nominal reference frequency.

Frequency	Loss Variation
300 to 500 Hz	-0.5 to +2.0 dB
500 to 3000 Hz	-0.5 to +1.0 dB
3000 to 3400 Hz	-0.5 to +3.0 dB

(c) Variation of Loss with Signal Level

The variation of transmission loss with signal level, relative to the loss at an input signal of -10 dBm0 in the frequency range 700 to 1100 Hz, conforms to the limits shown below.

Input Level	Loss Variation
+3 to -40 dBm0	±0.5 dB
-40 to -50 dBm0	±1.0 dB
-50 to -55 dBm0	±3.0 dB

(d) Noise

With the extension port and the DEL interface both terminated by 600 Ω non-reactive impedance, the noise at the extension port and the DEL interface does not exceed -65 dBmp.

(e) Crosstalk

With a sinusoidal signal in the frequency range 700 to 1100 Hz at a level of 0 dBm0 applied to the extension port or the DEL interface, the crosstalk level received at any other extension port or DEL interface does not exceed -65 dBm0.

(f) Delay

The minimum propagation delay introduced into a call path between the extension port and the DEL interface, at a frequency within the band 300 to 3400 Hz, does not exceed 3 ms.

With the minimum propagation delay described above taken as a reference, the maximum relative delay at other frequencies in the band does not exceed the limits shown below.

Input Frequency	Maximum Relative Delay
500 to 600 Hz	1.5 ms
600 to 1000 Hz	0.75 ms
1000 to 2600 Hz	0.25 ms
2600 to 2800 Hz	1.5 ms

(g) Trunk-to-Trunk Connection, Tie Line Network and External Extension

Application of trunk-to-trunk connection (call-forwarding, call-transfer, conference call, etc.), tie line network or external extension does not cause degradation of the transmission performance of a PSTN call path. In some cases, amplification may be required to compensate the additional line loss.

Annex 1 to HKTA 2011

TECHNICAL GUIDE FOR CONDUCTING EVALUATION TEST AGAINST HKTA 2011

1. INTRODUCTION

This guide describes the conditions and procedures for reference of the manufacturers and recognised testing agencies to conduct the evaluation test of customer premises equipment (CPE) against HKTA 2011.

The scope of this guide covers only testing of electrical characteristics of the CPE using direct exchange lines (DEL) for connection to the public telecommunications networks. Those related to safety and electrical protection are excluded.

For the purpose of certification, compliance of the CPE with HKTA 2011 should be determined in accordance with this guide as far as possible.

In the event of conflict between HKTA 2011 and this guide, HKTA 2011 takes precedence.

2. TEST CONDITIONS

2.1 Test Environment

All tests should be performed under non-condensing conditions at:

- an ambient temperature in the range from +15°C to +35°C
- a relative humidity in the range from 10% to 80%

2.2 Feeding Bridge

The feeding bridge specified in this guide is a device used to:

- provide DC feeding and AC termination of the Equipment Under Test (EUT)
- couple measurement equipment to the EUT terminals

The feeding bridge is assumed to be ideal so that all measurements are referenced to the EUT terminals (i.e. the feeding bridge does not cause attenuation or delay, in the parameter to be measured, between the EUT terminals and the measurement equipment).

The normal feed voltage is 48 V and the feed resistance could be adjusted in providing different level of feed current to the EUT.

2.3 Suggested Equipment List

The suggested requirements for the measurement equipment needed to perform the tests in this guide are as follows:

- DC power supply: output level 0 V to 80 V
- AC voltage source: output 0 Vrms to 100 Vrms, frequency range 20 Hz to 28 Hz
- AC voltage source: output 0 Vrms to 5 Vrms, frequency range 300 Hz to 3400 Hz
- Resistors: accuracy ±1%
- DC voltmeter: input impedance > 1 MΩ, range 0 V to 80 V, accuracy ±3%
- AC voltmeter: input impedance > 1 MΩ, range 0 Vrms to 100 Vrms, accuracy ±3%
- DC ammeter: range 0 mA to 100 mA, accuracy ±3%
- AC ammeter: range 0 mA to 100 mA, frequency range 20 Hz to 28 Hz, accuracy ±3%
- AC ammeter: range 0 mA to 100 mA, frequency range 300 Hz to 3400 Hz, accuracy ±3%
- Psophometer: characteristic in line with ITU-T Rec. O.41

- Bandpass filter: cutoff frequency at 3 dB attenuation points, out-of-band roll-off > 24 dB per octave
- Spectrum analyzer: frequency range up to 1 MHz, resolution bandwidth down to 10 Hz, accuracy ±1% for frequency measurement and ±2 dB for power measurement
- Digital storage oscilloscope: input impedance > 1 MΩ, frequency range up to 1 MHz, accuracy ±3%
- Frequency counter: input impedance > 1 MΩ, frequency range up to 1 MHz, resolution < 1 Hz, accuracy ±1%

3. TEST PROCEDURES

3.1 General

The test procedures for the relevant clauses of HKTA 2011 which involve electrical characteristics of CPE are contained in the Section 3.2 to Section 3.24 of this guide.

The test procedures specified in this guide are not exclusive and alternative procedures that are equivalent to those specified may be used. The test configurations given in this guide do not imply a specific realisation of measurement equipment or arrangement or use of specific measurement devices for the compliance testing. The measurement equipment shall be a single device, or group of devices, generating a stimulus signal and providing test conditions (e.g. feeding conditions) conforming to this guide and capable of measuring the signal from the measurement point.

To determine the compliance of CPE, all results of measurements taken in Section 3.2 to 3.24 should meet the requirements given in the relevant clauses of HKTA 2011.

3.2 Bleed Current - Clause 3.2 of HKTA 2011

Purpose:	To check the bleed current drawn by the CPE under the idle state condition.
Test State:	Idle state.
Test Configuration:	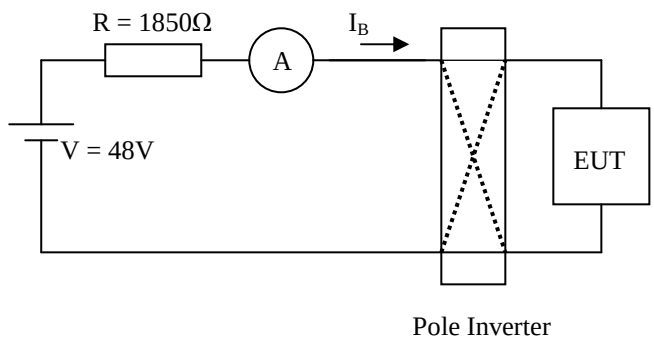
Measurement:	a) Measure the current I_B. b) Repeat by reversing the polarity of EUT by means of a pole inverter.
Verdict:	If the measured bleed current I_B meets the requirement given in Clause 3.2 of HKTA 2011 then Pass; else Fail.

3.3 Insulation Resistance - Clause 3.3 of HKTA 2011

Purpose:	To check the insulation resistance between A and B wires, A and ground, B and ground.
Test State:	Idle state. Disconnect the bleed circuit of the CPE if applicable.
Test Configuration:	A and B Wires 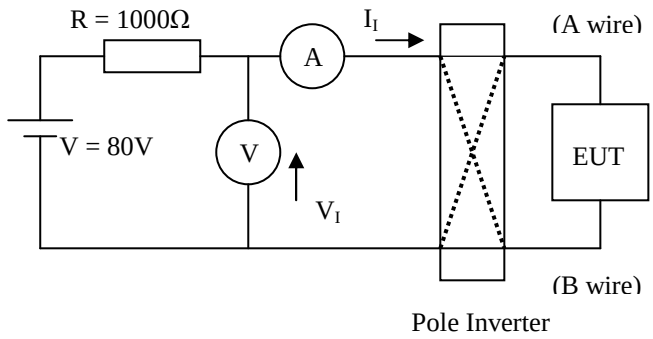 A/B and Ground (if Ground is available) 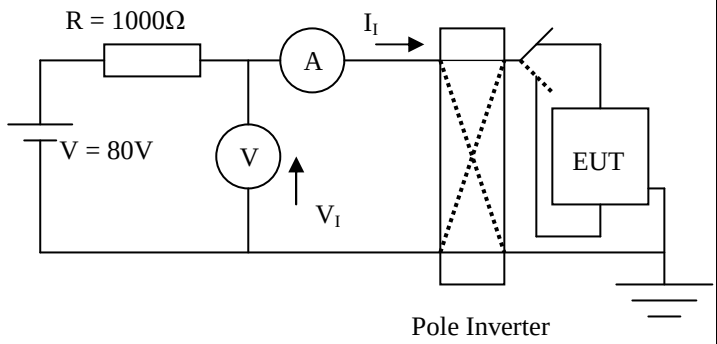
Measurement:	a) Measure the current I_I and voltage V_I. b) Repeat by reversing the polarity of EUT by means of a pole inverter.
Verdict:	If the measured insulation resistance $R_I(=V_I/I_I)$ meets the requirement given in Clause 3.3 of HKTA 2011 then Pass; else Fail.

3.4 Power Level in On-Hook State - Clause 3.4 of HKTA 2011

Purpose:	To check the noise of CPE under the idle state condition.
Test State:	Idle state.
Test Configuration:	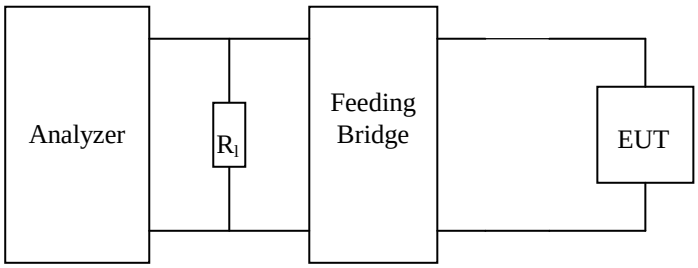 R_l = 600 Ω for measuring psophometic noise power R_l = 300 Ω for centre frequency of 8 kHz band from 8 kHz to 12 kHz R_l = 135 Ω for centre frequency of 8 kHz band from 12 kHz to 266 kHz
Measurement:	a) Measure the psophometic noise power across R_l. b) Measure the RMS voltage, averaged over 100 ms, across R_l in each 8 kHz band whose centre frequency is in the range of 8 kHz to 266 kHz.
Verdict:	If the measured psophometic noise power and RMS voltages meet the requirements given in Clause 3.4 of HKTA 2011 then Pass; else Fail.

3.5 Capacitance Presented between A and B Wires - Clause 3.5 of HKTA 2011

Purpose:	To check the capacitance of CPE presented to the exchange line A and B wires.
Test State:	Idle state.
Test Configuration:	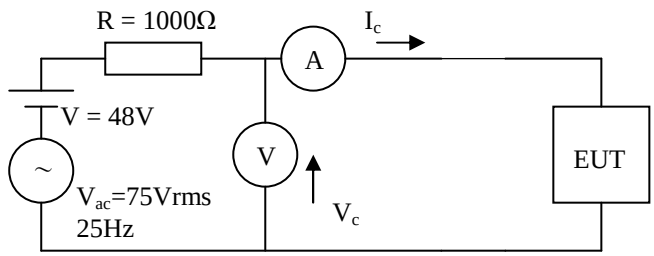
Measurement:	a) Measure the AC current I_c and voltage V_c.
Verdict:	Determine capacitance C using the equation: $C = 1/(2*\pi*25*Z*\sin\theta)$ where $Z = V_c/I_c$ θ = phase angle between V_c and I_c. If C meets the relevant requirement (single-line or multi-line CPE) given in Clause 3.5 of HKTA 2011 then Pass; else Fail.

3.6 Voice-band Impedance in On-hook State - Clause 3.6 of HKTA 2011

Purpose:	To check the impedance of CPE presented to the A and B wires under the idle state condition.
Test State:	Idle state.
Test Configuration:	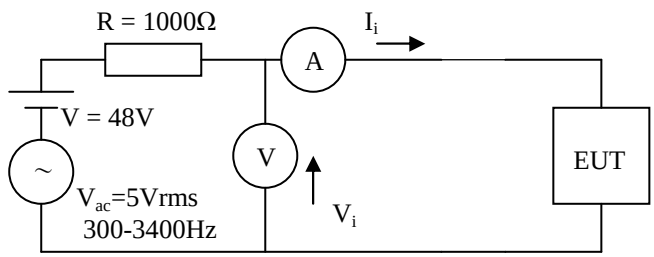
Measurement:	a) Measure the AC current I_i and voltage V_i at V_{ac} of 300Hz, 1000Hz, 2200Hz and 3400Hz.
Verdict:	If the measured impedance $Z_i(=V_i/I_i)$ at each frequency meets the requirement given in Clause 3.6 of HKTA 2011 then Pass; else Fail.

3.7 Ringing Impedance - Clause 3.7 of HKTA 2011

Purpose:	To check the impedance of CPE during the ringing state.
Test State:	Ringing state.
Test Configuration:	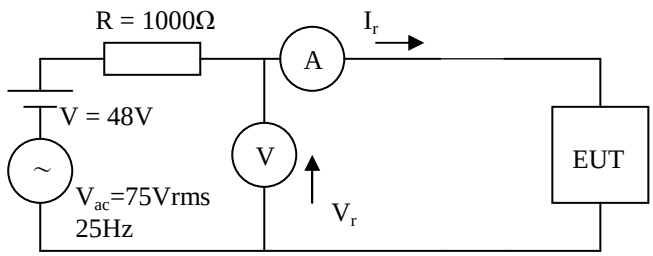
Measurement:	a) Measure the AC current I_r and voltage V_r.
Verdict:	If the measured impedance $Z_r(=V_r/I_r)$ meets the requirement given in Clause 3.7 of HKTA 2011 then Pass; else Fail.

3.8 Ringing Detection – Clause 3.8 of HKTA 2011

Purpose:	To check the sensitivity of ringing signal detection circuit.
Test State:	Ringing state.
Test Configuration:	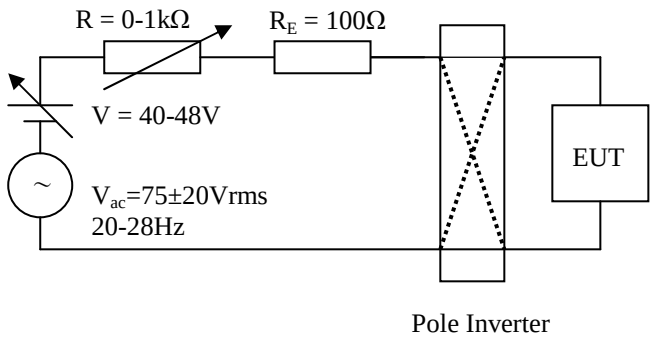
Measurement:	a) Check the sensitivity of ringing signal detection circuit at: • V=40V, R=1kΩ, V_{ac}=55Vrms/20Hz • V=40V, R=1kΩ, V_{ac}=55Vrms/28Hz • V=48V, R=0Ω, V_{ac}=95Vrms/20Hz • V=48V, R=0Ω, V_{ac}=95Vrms/28Hz b) Repeat by reversing the polarity of EUT by means of a pole inverter.
Verdict:	If EUT responds to all of the above conditions then Pass; else Fail.

3.9 OFF-HOOK D.C. CHARACTERISTICS – Clause 4 of HKTA 2011

Purpose:	To check the DC characteristics of CPE under the off-hook state condition.
Test State:	Off-hook state.
Test Configuration:	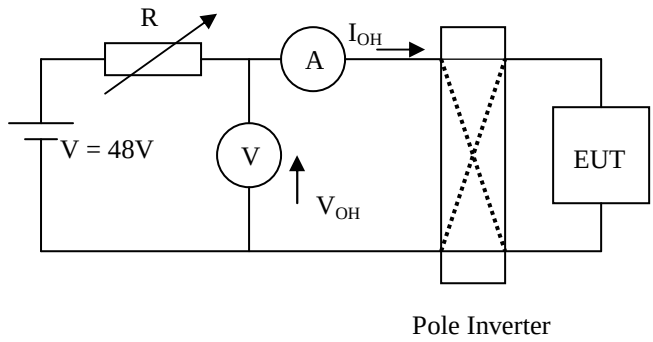 Vary the resistance R to make I_{OH} between 20 mA to 100 mA.
Measurement:	a) Measure the voltage V_{OH} at current I_{OH} of 20mA, 30mA, 40mA, 50mA, 60mA, 70mA, 80mA, 90mA and 100mA. b) Repeat by reversing the polarity of EUT by means of a pole inverter.
Verdict:	If all the measured voltages V_{OH} at each level of I_{OH} are within the acceptable region given in Figure 2 of HKTA 2011 then Pass; else Fail.

3.10 General - Clause 7.1 of HKTA 2011

Purpose:	To check the DC potential transmitted from CPE to the exchange line.
Test State:	Idle state and off-hook state.
Test Configuration:	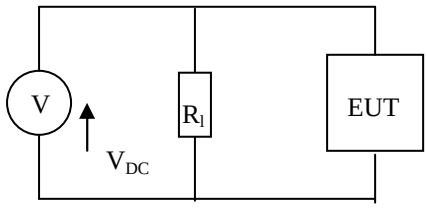 R_l = 600 Ω
Measurement:	a) Measure the voltage V_{DC} in idles state. b) Measure the voltage V_{DC} in off-hook state.
Verdict:	If no measured voltage V_{DC} exceeds the magnitude of 100mV then Pass; else Fail.

3.11 Continuous Tone Signals - Clause 7.2.1 of HKTA 2011

Purpose:	To check the in-band power level of the continuous tone signals transmitted from CPE to the exchange line.
Test State:	Off-hook state with continuous tone signals on.
Test Configuration:	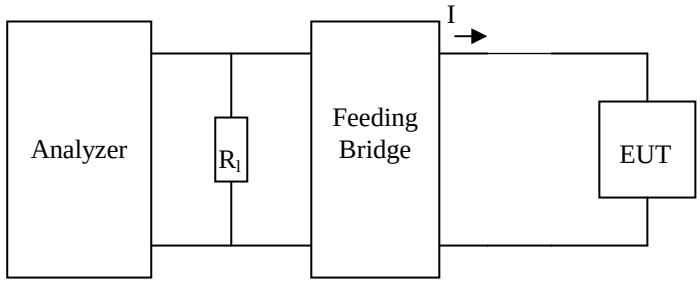 R_l = 600 Ω
Measurement:	a) Measure the signal power across R_l for feed current I=20mA in each 10Hz band within the frequency range 0 to 4 kHz. b) Repeat a) for feed current I=60mA and 100mA.
Verdict:	If results of power measurement meet the requirement given in Figure 7 of HKTA 2011 then Pass; else Fail.

3.12 Non-continuous Tone Signals - Clause 7.2.2 of HKTA 2011

Purpose:	To check the in-band power level of the non-continuous tone signals (i.e. activity time of 30 seconds or less in one minute) transmitted from CPE to the exchange line.
Test State:	Off-hook state with non-continuous tone signals on.
Test Configuration:	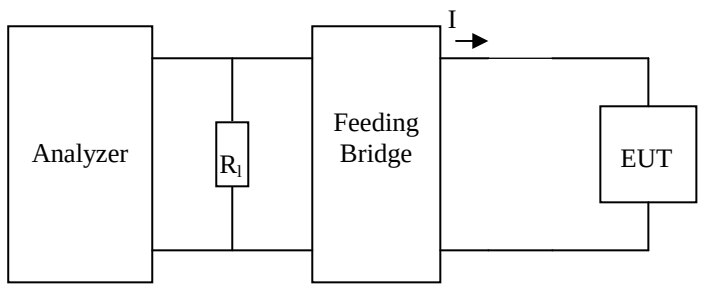 R_l = 600 Ω
Measurement:	a) Measure the signal power across R_l for feed current I=20mA in each 10Hz band within the frequency range 0 to 4 kHz. b) Repeat a) for feed current I=60mA and 100mA.
Verdict:	If results of power measurement meet the requirement given in Clause 7.2.2 of HKTA 2011 then Pass; else Fail.

3.13 Power Level - Clause 7.3.2 of HKTA 2011

Purpose:	To check the in-band power level of the voice signals transmitted from CPE to the exchange line.
Test State:	Off-hook state with voice signals (music-on-hold, pre-recorded message (whether or not stored in the CPE), etc. may be used to simulate live voice) on.
Test Configuration:	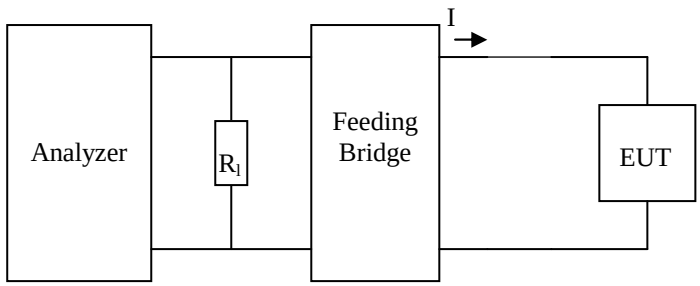 R_l = 600 Ω
Measurement:	a) Measure the signal power, averaged over 3-second interval, across R_l for feed current I=20mA in each 10Hz band within the frequency range 300 to 4000 Hz. b) Repeat a) for feed current I=60mA and 100mA.
Verdict:	If results of power measurement meet the requirement given in Clause 7.3.2 of HKTA 2011 then Pass; else Fail.

3.14 Acoustically Coupled Devices - Clause 7.3.4 of HKTA 2011

Purpose:	To check the instantaneous peak signal power transmitted to the network by acoustically coupled device.
Test State:	Off-hook state with associated acoustically coupled device on.
Test Configuration:	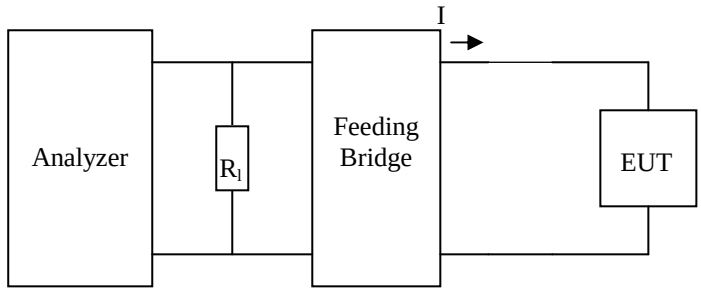 R_l = 600 Ω
Measurement:	a) Measure the instantaneous peak signal power across R_l for feed current I=20mA in each 10Hz band within the frequency range 0 to 4 kHz. b) Repeat a) for feed current I=60mA and 100mA.
Verdict:	If the measured instantaneous peak signal power meets the requirement given in Clause 7.3.4 of HKTA 2011 then Pass; else Fail.

3.15 Out-band Power Limits - Clause 7.4 of HKTA 2011

Purpose:	To check the out-band power transmitted under the off-hook state.
Test State:	Off-hook state.
Test Configuration:	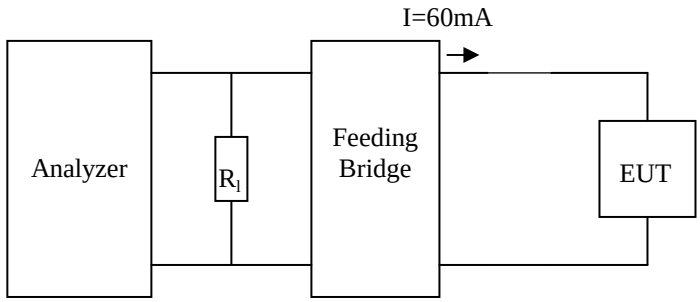 R_l = 300 Ω for centre frequency of 8 kHz band from 8 kHz to 12 kHz R_l = 135 Ω for centre frequency of 8 kHz band from 12 kHz to 266 kHz
Measurement:	a) Measure the RMS voltage, averaged over 100 ms, across R_l for feed current I=60mA in each 8 kHz band whose centre frequency is in the range of 8 kHz to 266 kHz.
Verdict:	If the measured RMS voltages meet the requirement given in Table 1 of HKTA 2011 then Pass; else Fail.

3.16 Loop Disconnect Signalling - Clause 8.4 of HKTA 2011

(a) Disconnection Resistance

Purpose:	To check the disconnection resistance during the pulse-break period.
Test State:	Pulsing state.
Test Configuration:	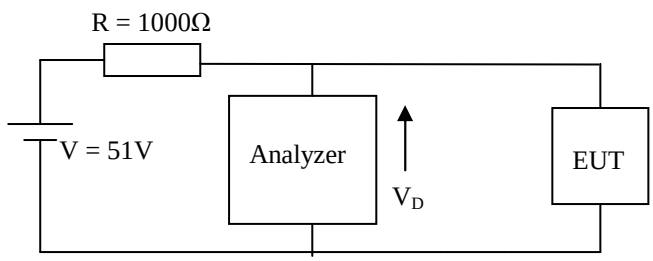
Measurement:	a) Measure the voltage V_D during the pulse-break period.
Verdict:	If the measured voltage V_D is greater than 50 V then Pass; else Fail.

(b) DC Characteristics During Pulse-make period

Purpose:	To check the DC characteristics during the pulse-make period, if applicable.
Test State:	Pulsing state.
Test Configuration:	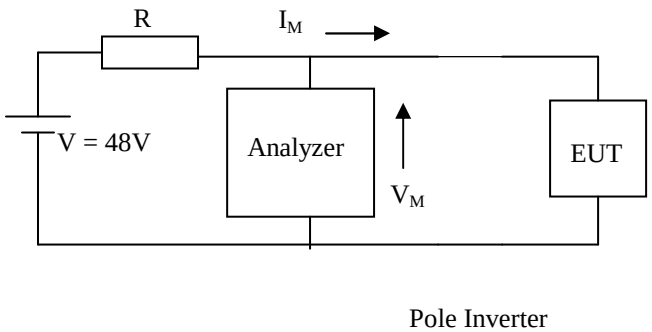
Measurement:	a) Measure the voltage V_M during the pulse-make period for R=300Ω, 1000Ω and 2000Ω.
Verdict:	Determine current I_M during the pulse-make period using the equation:

	$I_M = (48-V_M)/R$ If all the measured voltages V_M at each level of I_M are within the acceptable region given in Figure 3 of HKTA 2011 then Pass; else Fail.

(c) Pulsing Performance

Purpose:	To check the pulsing performance.
Test State:	Pulsing state.
Test Configuration:	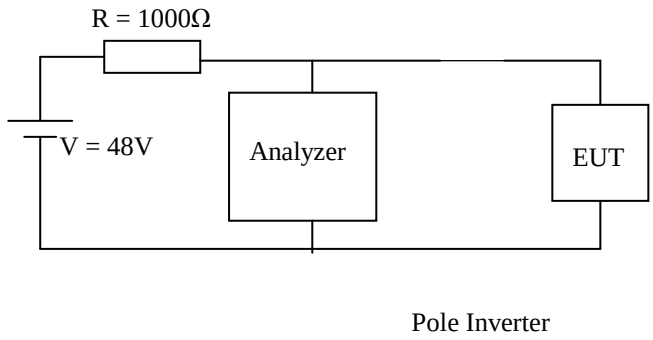
Measurement:	a) Record the timing of the pulses during the pulsing state.
Verdict:	If the measured pulsing conditions meet with the requirements given in Clause 8.4 (c) of HKTA 2011 then Pass; else Fail.

3.17 Tone Frequency - Clause 8.5.2.2 of HKTA 2011

Purpose:	To check the tone frequencies of the dialler.
Test State:	DTMF dialling state.
Test Configuration:	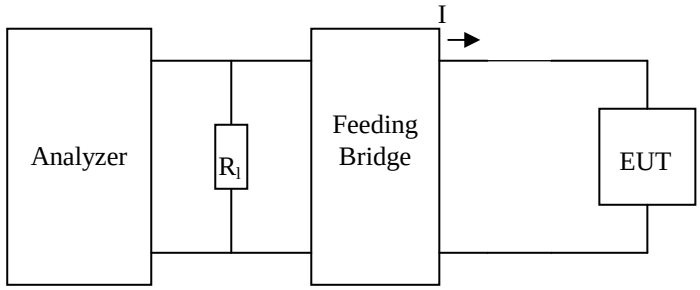 R_l = 600 Ω
Measurement:	a) Measure the tone frequencies across R_l for each digit (0 to 9, *, #, A to D if applicable) sent out by EUT at feed current I=20mA. b) Repeat a) for feed current I=60mA and 100mA.
Verdict:	If the measured tone frequencies for each digit are within ±1.5% of their values given in Clause 8.5.1 of HKTA 2011 then Pass; else Fail.

3.18 Sending Levels - Clause 8.5.2.3 of HKTA 2011

Purpose:	To check the DTMF signal power.
Test State:	DTMF dialling state.
Test Configuration:	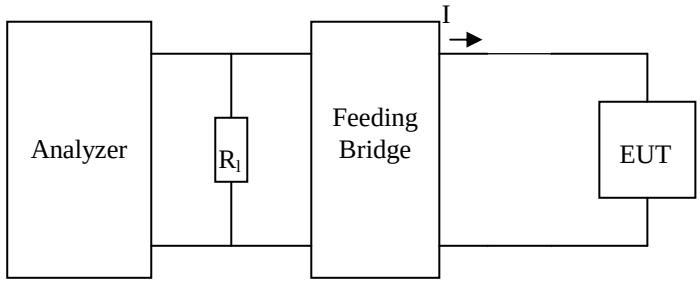 R_l = 600 Ω
Measurement:	a) Measure the power level of the higher frequency component and lower frequency component across R_l for each digit (0 to 9, *, #, A to D if applicable) at feed current I=20mA. b) Repeat a) for feed current I=60mA and 100mA.
Verdict:	If all the measured power levels meet the requirements given in Clause 8.5.2.3 of HKTA 2011 then Pass; else Fail.

3.19 Power Level of Unwanted Signal – Clause 8.5.2.4 of HKTA 2011

Purpose:	To check the power level emitted from the dialler when no DTMF signal is being sent.
Test State:	DTMF dialling state.
Test Configuration:	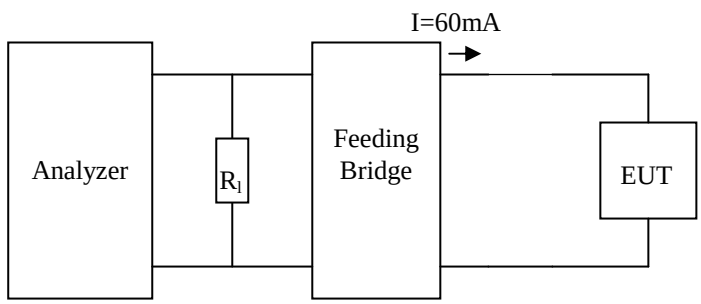 R_l = 600 Ω
Measurement:	a) Measure the total power across R_l at feed current I=60mA during the off period of the DTMF signal, range from 300 Hz to 4 kHz.
Verdict:	If the measured power meets the requirement given in Clause 8.5.2.4 of HKTA 2011 then Pass; else Fail. Note: This condition shall also be met within 10 ms from the time the DTMF signal is stopped.

3.20 Individual Unwanted Frequency Component – Clause 8.5.2.5 of HKTA 2011

Part 1

Purpose:	To check the level of unwanted frequency component in the frequency range of 8 kHz to 266 kHz.
Test State:	DTMF dialling state.
Test Configuration:	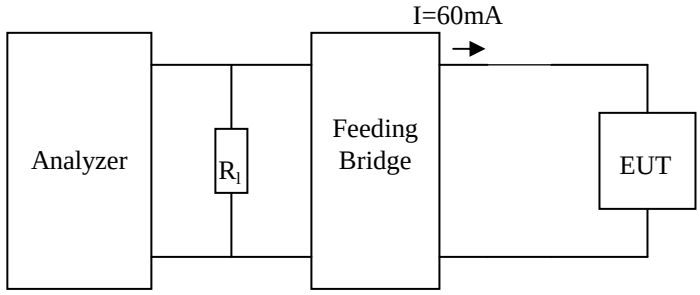 R_l = 300 Ω for centre frequency of 8 kHz band from 8 kHz to 12 kHz R_l = 135 Ω for centre frequency of 8 kHz band from 12 kHz to 266 kHz
Measurement:	a) During the on period of the DTMF signal 1, measure the RMS voltage level, averaged over 100 ms, across R_l at feed current I=60mA in each 8 kHz band whose centre frequency is in the range of 8 kHz to 266 kHz. b) Repeat a) for DTMF signal 5, 9 and D(or, when it is not provided, the signal 0).
Verdict:	If the measured RMS voltages meet the requirement given in Table 1 of HKTA 2011 then Pass; else Fail.

Part 2

Purpose:	To check the level of unwanted frequency component in the frequency range of 300 Hz to 4 kHz.
Test State:	DTMF dialling state.
Test Configuration:	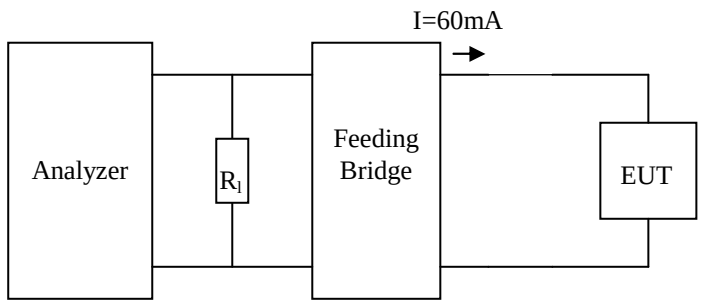 R_l = 600 Ω
Measurement:	a) During the on period of the DTMF signal 1, measure the power level of unwanted frequency component across R_l at feed current I=60mA, in a bandwidth of 125 Hz, in the frequency range of 300 Hz to 4 kHz b) Repeat a) for DTMF signal 5, 9 and D(or, when it is not provided, the signal 0).
Verdict:	If the measured power level of individual unwanted frequency component meets the requirement given in Clause 8.5.2.5 of HKTA 2011 then Pass; else Fail.

3.21 Transient Characteristic of the DTMF Signal – Clause 8.5.2.6 of HKTA 2011

Purpose:	To check the transient characteristic of the DTMF signal.
Test State:	DTMF dialling state.
Test Configuration:	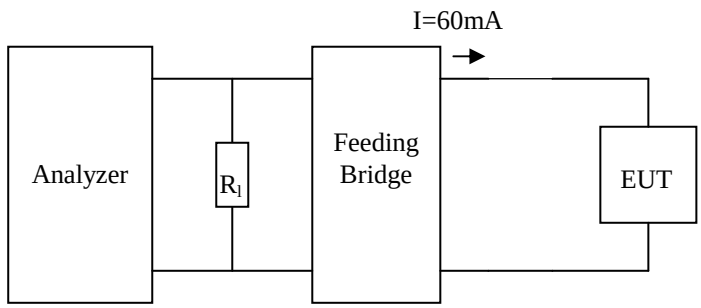 R_l = 600 Ω
Measurement:	a) Measure the transient power of the DTMF signal 1 from off to on across R_l at feed current I=60mA. b) Repeat a) for DTMF signal 5, 9 and D (or, when it is not provided, the signal 0).
Verdict:	If the measured transient powers meet the requirement given in Clause 8.5.2.6 of HKTA 2011 then Pass; else Fail.

3.22 Signal Timing - Clause 8.5.2.7 of HKTA 2011

Purpose:	To check the DTMF signal timing.
Test State:	DTMF dialling state.
Test Configuration:	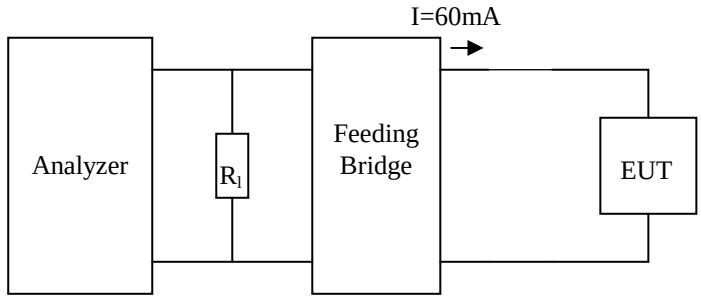 R_l = 600 Ω
Measurement:	a) Measure the signal duration and interdigital pause of the DTMF signal sequence 1, 5, 9, D (or, when it is not provided, the signal sequence 1, 5, 9, 0) across R_l at feed current I=60mA.
Verdict:	If the measured signal duration and interdigital pause meet the signal timing requirements given in Clause 8.5.2.7 of HKTA 2011 then Pass; else Fail.

3.23 Automatic DTMF Dialler - Clause 8.5.2.8 of HKTA 2011

Purpose:	To check the DTMF signal timing of an automatic dialler.
Test State:	DTMF dialling state.
Test Configuration:	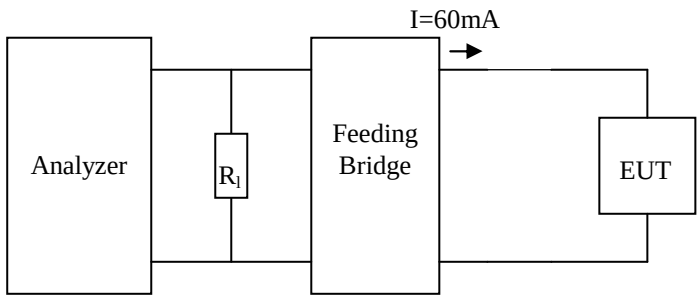 R_l = 600 Ω
Measurement:	a) Measure the timing of signal duration, interdigital pause and predigital pause of DTMF signal sequence 1, 5, 9, D (or, when it is not provided, the signal sequence 1, 5, 9, 0) across R_l at feed curent I=60mA.
Verdict:	If all the measured timings meet the requirements given in Clause 8.5.2.8 of HKTA 2011 then Pass; else Fail.

3.24 Steady State Signal Power Variation - Clause 8.5.2.9 of HKTA 2011

Purpose:	To check the steady state signal power variation of DTMF signal.
Test State:	DTMF dialling state.
Test Configuration:	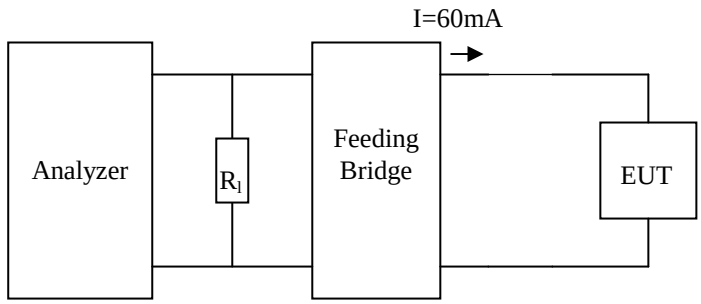 R_l = 600 Ω
Measurement:	a) Measure the steady state power of the DTMF signal 1 across R_l at feed current I=60mA. b) Repeat a) for DTMF signal 5, 9 and D (or, when it is not provided, the signal 0).
Verdict:	If the measured steady state signal power meets the requirement given in Clause 8.5.2.9 of HKTA 2011 then Pass; else Fail.