HKTA 2201
ISSUE 5
AUGUST 2005

# GENERAL TECHNICAL CHARACTERISTICS OF FIXED TELECOMMUNICATIONS NETWORKS IN HONG KONG

OFTA
電訊管理局

**TELECOMMUNICATIONS AUTHORITY**
**HONG KONG**

## FOREWORD

1. In order to facilitate network interconnection and service interoperability between wireline equipment and the fixed telecommunications networks, there is a need to specify the relevant technical characteristics on the network side. This specification defines the general technical characteristics of the fixed telecommunications networks in Hong Kong. The Fixed Telecommunication Network Services (FTNS) operators shall comply with this specification as well as other applicable codes of practice and guides issued by the Telecommunications Authority (TA).

2. As different switching systems and technologies are employed by the FTNS operators, the characteristics of each network may differ. Details of the individual network characteristics and services offered are available direct from the FTNS operators. Contact information of the FTNS operators can be found in the information note OFTA I 412 titled "How to apply for certification of customer premises equipment to be connected to the public telecommunications network in Hong Kong" issued by the Telecommunications Authority (TA).

3. The Telecommunications Authority (TA) reserves the right to revise the contents of this specification without prior notice. Amendments or re-issues of this specification may not be distributed automatically to the FTNS operators and equipment manufacturers / suppliers and it will be their responsibility to ensure that their equipment conform to the latest requirements.

4. The TA accepts no responsibility for the satisfactory end-to-end performance of wireline equipment connected to the networks of the FTNS operators. This specification does not address performance, reliability or quality-of-service parameters.

5. The HKTA series specifications and information notes issued by the TA can be obtained through one of the following methods:-

   - downloading direct through the Office of Telecommunications Authority's (OFTA)'s Internet Home Page. The Home Page address is http://www.ofta.gov.hk;

   - making a request for hard copies to :-

     Senior Telecommunications Engineer
     Standards Section
     Office of the Telecommunications Authority
     29/F Wu Chung House
     213 Queen's Road East
     Wanchai
     Hong Kong

     Fax : +852 2838 5004
     Email : standards@ofta.gov.hk

6. Enquiries about this specification may be directed to :

Senior Telecommunications Engineer
Standards Section
Office of the Telecommunications Authority
29/F Wu Chung House
213 Queen's Road East
Wanchai
Hong Kong

Fax: +852 2838 5004
Email : standards@ofta.gov.hk

## AMENDMENT HISTORY

| Item | Issue No. | Paragraph | Descriptions |
|---|---|---|---|
| 1. | Issue 2 | Foreword | Update information for FTNS operators and for OFTA |
| 2. | Issue 2 | Clause 1 | Include editorial changes |
| 3. | Issue 2 | Clause 2 | Rewrite as clause 2.1 to 2.2 |
| 4. | Issue 2 | Clause 3 | Change title to "Numbering".<br>Rewrite clause 3.1 and delete clauses 3.2 and 3.3 |
| 5. | Issue 2 | Clause 4 | Change title to "Basic Characteristics of Direct Exchange Line"<br>Move original requirements on basic ringing signal to clause 4.2. Add new clauses 4.1, 4.3 and 4.4 |
| 6. | Issue 2 | Clause 5 | Change title to "Basic Tone Characteristics"<br>Include editorial changes and restructure clauses 5.1 to 5.4. Make clarification on power levels of basic tones |
| 7. | Issue 2 | Clause 6 | Include editorial changes<br>Restructure clause 6.3.1 as clauses 6.3.1 to 6.3.3 |
| 8. | Issue 2 | Clause 7 | Delete original clause 7.1<br>Move old clause 7.2 to 7.1. Add new clauses 7.2 and 7.3 |
| 9. | Issue 2 | Clause 8 | Update reference documents |
| 10. | Issue 2 | Annex 1 | Include editorial changes and add information on supplementary ringing signals |
| 11. | Issue 2 | Annex 2 | Include editorial changes |
| 12. | Issue 2 | Annex 3 | Add new Annex 3 on nominal pad settings of FTNS operators |
| 13. | Issue 3 | Clause 4 | Revise clause 4.1.6 regarding the timing value |
| 14. | Issue 3 | Clause 5 | Delete clause 5.4 regarding requirement on other tones |
| 15. | Issue 3 | Clause 7 | Update the references to ITU-T recommendations in clauses 7.1 and 7.2 |
| 16. | Issue 3 | Clause 8 | Update the categories of ITU-T recommendations in clause 8.3 |
| 17. | Issue 3 | Annex 2 | Include editorial changes |
| 18. | Issue 4 | Clauses 8 and 9 | Add new clause 8 on POTS splitter characteristics; previous clause 8 moved to clause 9 |
| 19. | Issue 4 | Annex 1 | Update company names of FTNS operators |
| 20. | Issue 4 | Annex 2 | Update company names of FTNS operators |

| Item | Issue No. | Paragraph | Descriptions |
|---|---|---|---|
| 21. | Issue 4 | Annex 3 | Update company names of FTNS operators |
| 22. | Issue 4 | Annex 4 | Add new Annex 4 : Characteristics of POTS Splitter for Broadband Type-II Interconnection at the Exchange Side of the Fixed Telecommunications Networks in Hong Kong |
| 23. | Issue 5 | Foreword | Editorial amendments. |
| 24. | Issue 5 | Clause 4.2.5 | Update the requirement on ringing time-out. |
| 25. | Issue 5 | Clause 5.2.2 | Update the requirement on ringing tone. |

**CONTENTS**

**1. SCOPE**

**2. NETWORK CONNECTION SPECIFICATION**

**3. NUMBERING**

**4. BASIC CHARACTERISTICS OF DIRECT EXCHANGE LINE**

**5. BASIC TONE CHARACTERISTICS**

**6. BASIC ANALOGUE TRANSMISSION CHARACTERISTICS**

**7. BASIC DIGITAL TRANSMISSION CHARACTERISTICS**

**8. SPLITTER CHARACTERISTICS FOR PARTIAL BANDWIDTH OPTION**

**9. REFERENCE**

Annex 1 Summary of the Ringing Signals of the Fixed Telecommunications Networks in Hong Kong

Annex 2 Summary of the Basic Tones of the Fixed Telecommunications Networks in Hong Kong

Annex 3 Nominal Pad Settings of the Fixed Telecommunications Networks in Hong Kong

Annex 4 Characteristics of POTS Splitter for Broadband Type-II Interconnection at the Exchange Side of the Fixed Telecommunications Networks in Hong Kong

## 1. SCOPE

This technical specification defines the general technical characteristics of the fixed telecommunications networks in Hong Kong.

## 2. NETWORK CONNECTION SPECIFICATION

### 2.1 USER-TO-NETWORK CONNECTION

The fixed telecommunications network (the network) shall be able to work with customer premises equipment (CPE) which comply with the relevant HKTA 20XX series specifications issued by the Telecommunications Authority (TA).

### 2.2 NETWORK-TO-NETWORK CONNECTION

The network shall comply with the relevant HKTA 22XX series specifications issued by the TA for network-to-network connection.

## 3. NUMBERING

3.1 The network shall have numbering structure and digit handling capability to support :

(a) The Numbering Plan for Telecommunications Services in Hong Kong issued by the TA; and

(b) ITU-T Recommendation E.164 on "The International Public Telecommunication Numbering Plan".

## 4. BASIC CHARACTERISTICS OF DIRECT EXCHANGE LINE

### 4.1 BASIC LINE AND DIALLING SIGNALS

#### 4.1.1 Idle State Condition

The idle state condition of the direct exchange line (DEL) is equivalent to the on-hook state. The idle state condition of the DEL on the network side shall be earth on Tip (A-wire) and a nominal voltage of -40 to -48 Vdc on Ring (B-wire).

4.1.2 Seizure Signal

The network shall support loop-start method used by the CPE as a seizure signal for DEL.

4.1.3 Dialling Signal

The network shall support both tone dialling (DTMF signalling) and pulse dialling (loop-disconnect signalling) signals sent by the CPE.

4.1.4 Answer Signal

Answer signal to the CPE of the calling party is an optional network facility.

If answer signal is provided by the network to the CPE of the calling party, the answer signal shall be a reversal of line polarity when the CPE of the called party answers the call, i.e. negative voltage on Tip and earth on Ring. The magnitude of the negative voltage on Tip will depend on the d.c. loop condition in off-hook state.

4.1.5 Clear Signal

The network shall recognise the disconnection of seizure loop (i.e. restoration to idle state) by the CPE for a duration of 1 second or more as a clear signal for release of a call connection.

4.1.6 Re-answer Supervision

When clear signal is sent by the CPE of the called party and re-answer supervision is supported by the network, the network shall release the call connection when the restoration to idle state has been maintained by the CPE of the called party until the expiry of network re-answer supervision timing. The re-answer supervision timing shall have a maximum value of 40 seconds.

**Note**: The long-term objective of re-answer supervision timing is 20 seconds maximum.

4.2 BASIC RINGING SIGNAL

4.2.1 General

The basic ringing signal is the signal sent from the network to the CPE of the called party for call set-up purpose. The network shall provide basic ringing signal with characteristics as defined in clauses 4.2.2 to 4.2.5.

4.2.2 Ringing Frequency and Voltage

Frequency : Range from 20 Hz to 28 Hz

Voltage : Ringing voltage of 75 ± 20 Vrms shall be superimposed on -40 to -48 Vdc (at exchange side with line impedance of 0 to 1000 Ω).

4.2.3 Ringing Cadence

The cadence for the basic ringing signal shall be as follows with tolerance of ± 10%:-

0.4 second ON
0.2 second OFF
0.4 second ON
3.0 second OFF

4.2.4 Immediate Ringing Cadence

If immediate ringing is provided by the network, the first ON period of the first cycle of the ringing cadence described in clause 4.2.3 shall be in the range of 0.4 to 0.9 second.

4.2.5 Ringing Time-Out

If ringing time-out is provided by the network, ringing shall automatically be ceased by the network after about 1 to 2 minutes. Upon ringing time-out, the called DEL shall be restored to idle state condition and busy tone shall be returned to the calling party in place of ringing tone as specified in clause 5.2.2.

4.2.6 A summary on the existing characteristics of the basic ringing signals of the fixed telecommunications networks in Hong Kong is tabulated in Annex 1.

4.3 SUPPLEMENTARY RINGING SIGNALS

4.3.1 Supplementary ringing signals other than the basic ringing signal defined in clause 4.2 for the operation of enhanced customer services is optional network facility.

If supplementary ringing signals are provided by the network, the ringing signals shall have technical characteristics same as the basic ringing signal except for the ringing cadence defined in clause 4.2.3.

4.3.2 A summary on supplementary ringing signals provided by the fixed telecommunications networks in Hong Kong is given in Annex 1.

## 4.4 HOOK FLASH SIGNAL

4.4.1 Hook flash signal is an optional network facility to support operation of enhanced customer services.

If hook flash signal is supported by the network, the network shall recognise the momentary disconnection of seizure loop by the CPE for a duration of 300 to 700 ms as a hook flash signal and differentiate it from the clear signal defined in clause 4.1.5.

# 5. BASIC TONE CHARACTERISTICS

## 5.1 GENERAL

The network shall provide the basic tones as defined in clause 5.2. The basic tones shall have the technical characteristics defined in clause 5.3.

## 5.2 DEFINITION OF TONES

### 5.2.1 Dial Tone

When the calling party initiates a call to the network, dial tone shall be returned as soon as the network is in a state ready to receive the incoming dialling signals. The tone shall be removed as soon as the network detects the first dialled digit.

### 5.2.2 Ringing Tone

When the called party is ready to receive a call, a basic ringing tone, complying with the technical characteristics in clause 5.3, or other forms (such as music, songs etc.) can be returned to the calling party.

### 5.2.3 Busy Tone (Customer Busy)

Busy tone shall be returned to the calling party when the called party is engaged or in a "locked-out" condition.

### 5.2.4 Congestion Tone (Network Busy)

Congestion tone shall be returned to the calling party when the network is busy.

### 5.2.5 Number Unobtainable (NU) Tone

Number unobtainable tone shall be returned to the calling party to indicate that the called number is :

- out of service,
- a spare code or number,
- the access code of a service which is not available to the calling party, or not accessible due to certain service restrictions.

## 5.3 TECHNICAL CHARACTERISTICS

### 5.3.1 Frequencies And Cadences

(a) The frequency and cadence of the basic tones are defined in the following table.

| Item | Type of Tone | Frequency (Hz) | Cadence (Second) |
|---|---|---|---|
| i. | Dial Tone | 350 + 440 | Continuous |
| ii. | Ringing Tone | 440 + 480 | 0.4 sec ON / 0.2 sec OFF / 0.4 sec ON / 3.0 sec OFF |
| iii. | Busy Tone | 480 + 620 | 0.5 sec ON / 0.5 sec OFF |
| iv. | Congestion Tone | 480 + 620 | 0.25 sec ON / 0.25 sec OFF |
| v. | Number Unobtainable Tone | 480 + 620 | Continuous |

(b) The frequency tolerance for the above tones is ±1.0%.

(c) The cadence tolerance for the above tones is ±10%.

### 5.3.2 Power Levels

(a) In accordance with ITU-T Recommendation E.180 (equivalent with Q.35), the power levels of the ringing tone, busy tone, congestion tone, and number unobtainable tone are defined at a zero relative level point at the incoming (in the traffic direction) end of the network-to-network interface (see Figure 1). For the combined tone signals resulting from combination of frequency components, the power levels so defined shall have a nominal value of -10 dBm0 measured with continuous tone (or -16 dBm0 at the main distribution frame (MDF) of the local exchange of the network) and the values shall be in the range -5 to -15 dBm0 (or -11 to -21 dBm0 at the MDF).

(b) For the power level of the dial tone, the point of reference is the MDF of the local exchange of the network, where the DEL is connected. The absolute power of the combined tone signal at the 2-wire access in the direction towards the CPE is normally in the range of –10 dBm ± 5 dB. To avoid interference with multi-frequency push button receivers at the local exchange, dial tone level higher than -10 dBm should be avoided.

(c) Each harmonic shall not exceed -50 dBm or shall be at least 30 dB below the signal level for individual frequency component.

5.3.3 A summary on the existing characteristics of the basic tones provided by the fixed telecommunications networks in Hong Kong is tabulated in Annex 2.

## 6. BASIC ANALOGUE TRANSMISSION CHARACTERISTICS

### 6.1 PASS-BAND

All the exchange lines and trunks of the network shall have a nominal pass-band of 300 to 3400 Hz, with 600 Ω nominal non-reactive terminating impedance for telephony services. Echo cancellers / suppressers will not be provided by the operators.

### 6.2 LOCAL LOOP ATTENUATION

The local loop for the exchange lines and trunks of the network shall have attenuation less than 10 dB at 1600 Hz depending on the length of the loop.

### 6.3 JUNCTION (INTER-EXCHANGE CIRCUITS) LOSS

#### 6.3.1 Pad Settings For Transmission Paths

Figure 1 shows the pad settings T and R for the "send" path and the "receive" path respectively between the network side and the CPE side. As a general principle, it is required that the ITU-T Recommendations concerning loudness ratings (G.121) and stability & echo (G.122) be followed.

6.3.2 The individual values for T and R in conjunction with the nominal CPE loudness rating performance shall meet the long term objectives for loudness rating requirements referred to the Virtual International Connecting Points (VICP) as specified in G.121,
i.e. Send Loudness Rating (SLR) = 7 to 9 dB;
Receive Loudness Rating (RLR) = 1 to 3 dB

6.3.3 The nominal value of the differential loss (R-T) is 6 dB at 1600 Hz; in all cases (R-T) shall be in the range of 3 to 9 dB.

Note: The nominal values of the T and R pads set by the fixed telecommunications networks in Hong Kong are given in Annex 3.

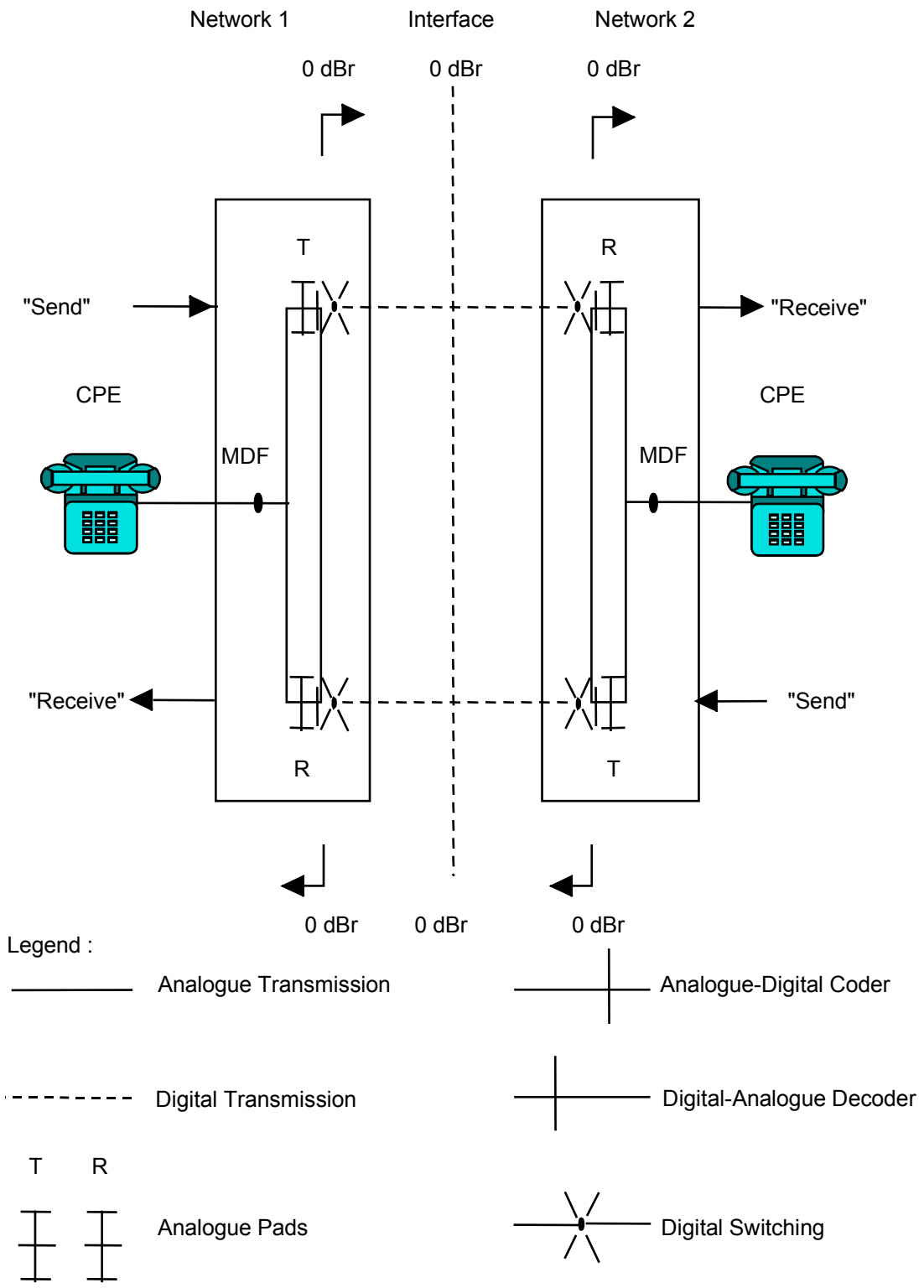


Figure 1 Pad Setting for Transmission Paths

6.3.4 The junction circuits (inter-exchange circuits) of the network are fully digital with no attenuation loss. Taking into account the local loop attenuation and the pad setting, a telephone call within Hong Kong may have an overall nominal attenuation of 26 dB (10 dB local + 6 dB pad setting + 10 dB local).

6.3.5 International circuits of the network are fully digital. The nominal attenuation between the CPE and the international gateway is 10 dB (10 dB local + 0 dB pad setting) for the "send" path and 16 dB (10 dB local + 6 dB pad setting) for the "receive" path respectively.

### 6.4 TRANSIENT VOLTAGES AND INTERFERENCE COMPONENTS

The network under normal circumstances may have transient voltages imposed upon it which may reach a peak of several hundred volts. Interference power components that may exist on exchange lines and trunks shall be subject to the following limits :

- Longitudinal induced voltages up to 20 Vrms at 50 Hz.

- Uniform spectrum and random noise having a power up to -45 dBm over the band 300 to 3400 Hz.

- Random impulse noise up to -22 dBm.

## 7. BASIC DIGITAL TRANSMISSION CHARACTERISTICS

### 7.1 DIGITAL TRANSMISSION CHARACTERISTICS AT 1544 kbit/s (T1)

Where digital interfaces are employed by the network at 1544 kbit/s, the following characteristics shall be followed:

(a) The physical/electrical characteristics of the 1544 kbit/s digital interface shall be in accordance with the relevant section of ITU-T Recommendation G.703.

(b) The basic frame structure and characteristics of the 1544 kbit/s digital interface shall be in accordance with the relevant sections of ITU-T Recommendation G.704.

(c) The control of jitter and wander for the 1544 kbit/s digital interface shall comply with ITU-T Recommendation G.824.

## 7.2 DIGITAL TRANSMISSION CHARACTERISTICS AT 2048 kbit/s (E1)

Where digital interfaces are employed by the network at 2048 kbit/s, the following characteristics shall be followed:

(a) The physical/electrical characteristics of the 2048 kbit/s digital interface shall be in accordance with the relevant section of ITU-T Recommendation G.703.

(b) The basic frame structure and characteristics of the 2048 kbit/s digital interface shall be in accordance with the relevant sections of ITU-T Recommendation G.704.

(c) The control of jitter and wander for the 2048 kbit/s digital interface shall comply with ITU-T Recommendation G.823.

## 7.3 DIGITAL TRANSMISSION CHARACTERISTICS AT OTHER HIERARCHY BIT RATES

Where digital interfaces are employed by the network using digital hierarchy bit rates other than 1544 kbit/s and 2048 kbit/s, the technical characteristics shall follow internationally accepted standards.

# 8. SPLITTER CHARACTERISTICS FOR PARTIAL BANDWIDTH OPTION

## 8.1 POTS SPLITTER

Where line-sharing with telephony services using a pass-band specified in Clause 6.1 is required to implement the partial bandwidth option of Broadband Type II Interconnection, a splitter shall be provided at the exchange side. The technical characteristics of the splitter shall follow the specification tabulated in Annex 4.

# 9. **REFERENCE**

## 9.1 Network Connection Specifications issued by the TA

| | |
|---|---|
| HKTA 20XX Series | Network Connection Specifications for Connection of Customer Premises Equipment (CPE) to the |

| | |
|---|---|
| | Public Telecommunications Networks (PTNs) in Hong Kong |
| HKTA 22XX Series | Network Connection Specifications for Network-to-Network Connection of the Public Telecommunications Networks (PTNs) in Hong Kong |

9.2 The Numbering Plan for Telecommunications Services in Hong Kong issued by the Telecommunications Authority

9.3 Relevant Recommendations issued by the ITU-T

| | |
|---|---|
| E-Series Recommendations | Overall Network Operation, Telephone Service, Service Operation and Human Factors |
| G-Series Recommendations | Transmission Systems and Media, Digital Systems and Networks |
| P-Series Recommendations | Telephone Transmission Quality, Telephone Installations, Local Line Networks |
| Q-Series Recommendations | Switching and Signalling |

- END -

## Annex 1 Summary of the Ringing Signals of the Fixed Telecommunications Networks in Hong Kong

| Item | Description | Reference Value Adopted by the TA | PCCW-HKT Telephone Ltd. | Wharf T&T Ltd. (WT&T) | Hutchison Global Communications Ltd. (HGC) | New World Telecommunications Ltd. (NWT) | | Remarks |
|---|---|---|---|---|---|---|---|---|
| 1. | Basic Ringing Signal | | | | | | | |
| a. | Frequency (min, max.) Hz | (20 , 28 ) | (23.5, 27.5) | 20 with tolerance +/- (1/3) Hz | (22, 28) | (22, 28) | 20 with tolerance +/- (1/3) Hz | All Complied |
| b. | Cadence | 0.4 sec ON, 0.2 sec OFF, 0.4 sec ON, 3.0 sec OFF with tolerance of +/- 10% | 0.4 sec ON, 0.2 sec OFF, 0.4 sec ON, 3.0 or 3.2 sec OFF | 0.4 sec ON, 0.2 sec OFF, 0.4 sec ON, 3.2 sec OFF | 0.4 sec ON, 0.2 sec OFF, 0.4 sec ON, 3.0 sec OFF | 0.4 sec ON, 0.2 sec OFF, 0.4 sec ON, 3.0 sec OFF | 0.4 sec ON, 0.2 sec OFF, 0.4 sec ON, 3.0 sec OFF | All Complied |
| c. | Voltage | 75 +/- 20 Vrms superimposed on -40 to -48V dc (at exchange MDF) | 75 +/- 20 Vrms superimposed on -40 to -48V dc (at exchange MDF) | 86 Vrms | 75 +/- 20Vrms | 75Vrms | 86 Vrms | All Complied |
| d. | Immediate Ringing | If applicable, the range should be 0.4 to 0.9 sec. | The first ON period of the first cycle of ringing cadence may vary from 0.4 to 0.8 sec. | Not Applicable | 0.4 to 0.9 sec | Not Applicable | Not Applicable | All Complied |
| e. | Ringing Time-out | If applicable, the range should be 60 to 120 sec. | About 120 sec. Upon time-out, the called DEL will restore to idle status and busy tone will be returned to the calling party in place of ringing tone. | 120 seconds | 60 to 120 sec | Not Applicable | 120 seconds | All Complied |

| Item | Description | Reference Value Adopted by the TA | PCCW-HKT Telephone Ltd. | Wharf T&T Ltd. (WT&T) | Hutchison Global Communications Ltd. (HGC) | New World Telecommunications Ltd. (NWT) | | Remarks |
|---|---|---|---|---|---|---|---|---|
| 2. | Supplementary Ringing Signals | | | | | | | |
| a. | Frequency, Voltage, Immediate Ringing, and Ringing Time-out | Same as 1a and 1c to 1e | Same as 1a and 1c to 1e | Same as 1a and 1c to 1e | Same as 1a and 1c to 1e | Same as 1a and 1c to 1e | Same as 1a and 1c to 1e | All Complied |
| b. | Cadence | Nil Requirement | DN 'B' of Duplex Ringing Feature:<br>1.2 sec ON, 3.0 sec OFF | Option 1:<br>1.2 sec ON, 3.0 sec OFF<br><br>Option 2:<br>0.4 sec ON, 0.2 sec OFF, 0.4 sec ON, 0.2 sec OFF, 0.8 sec ON, 0.4 sec OFF<br><br>Option 3:<br>0.5 sec ON, 0.5 sec OFF, 1.0 sec ON, 0.5 sec OFF, 0.5 sec ON, 3.0 sec OFF | DN 'B' of Duplex Ringing Feature :<br>1.2 sec ON, 3.0 sec OFF | Not specified | Not specified | |

## Annex 2 Summary of the Basic Tones of the Fixed Telecommunications Networks in Hong Kong

| Item | Description | Reference Value Adopted by the TA | PCCW-HKT Telephone Ltd. | Wharf T&T Ltd. (WT&T) | Hutchison Global Communications Ltd. (HGC) | New World Telecommunications Ltd. (NWT) | | Remarks |
|---|---|---|---|---|---|---|---|---|
| 1. | Dial Tone<br>i. Frequency (Hz)<br>ii. Cadence | 350 + 440<br>Continuous | 350 + 440<br>Continuous | 350 + 440<br>Continuous | 350 + 440<br>Continuous | 350 + 440<br>Continuous | 350 + 440<br>Continuous | All Complied |
| 2. | Ringing Tone<br>i. Frequency (Hz)<br>ii. Cadence | 440 + 480<br>0.4 sec ON,<br>0.2 sec OFF,<br>0.4 sec ON,<br>3.0 sec OFF | 440 + 480<br>0.4 sec ON,<br>0.2 sec OFF,<br>0.4 sec ON ,<br>3.0 or 3.2 sec OFF<br>(the first ON period of the first cycle of ringing tone may vary from 0.4 to 0.8 sec due to the application of immediate ringing tone) | 440 + 480<br>2.0 sec ON,<br>4.0 sec OFF | 440 + 480<br>0.4 sec ON,<br>0.2 sec OFF,<br>0.4 sec ON,<br>3.0 sec OFF | 440 + 480<br>0.4 sec ON,<br>0.2 sec OFF,<br>0.4 sec ON,<br>3.0 sec OFF | 440 + 480<br>2.0 sec ON,<br>4.0 sec OFF | New equipment purchased and installed by WT&T and NWT after 1 January 1999 shall comply with the reference value |
| 3. | Busy Tone<br>i. Frequency (Hz)<br>ii. Cadence | 480 + 620<br>0.5 sec ON,<br>0.5 sec OFF | 480 + 620<br>0.5 sec ON,<br>0.5 sec OFF | 480 + 620<br>0.5 sec ON,<br>0.5 sec OFF | 480 + 620<br>0.5 sec ON,<br>0.5 sec OFF | 480 + 620<br>0.5 sec ON,<br>0.5 sec OFF | 480 + 620<br>0.5 sec ON,<br>0.5 sec OFF | All Complied |

## Annex 2 Summary of the Basic Tones of the Fixed Telecommunications Networks in Hong Kong

| Item | Description | Reference Value Adopted by the TA | PCCW-HKT Telephone Ltd. | Wharf T&T Ltd. (WT&T) | Hutchison Global Communications Ltd. (HGC) | New World Telecommunications Ltd. (NWT) | | Remarks |
|---|---|---|---|---|---|---|---|---|
| 4. | Congestion Tone<br>i. Frequency (Hz)<br>ii. Cadence | 480 + 620<br>0.25 sec ON,<br>0.25 sec OFF | 480 + 620<br>0.25 sec ON,<br>0.25 sec OFF | 480 + 620<br>0.25 sec ON,<br>0.25 sec OFF | 480 + 620<br>0.25 sec ON,<br>0.25 sec OFF | 480 + 620<br>0.25 sec ON,<br>0.25 sec OFF | 480 + 620<br>0.25 sec ON,<br>0.25 sec OFF | All Complied |
| 5. | Number Unobtainable Tone<br>i. Frequency (Hz)<br>ii. Cadence | 480 + 620<br>Continuous | 480 + 620<br>Continuous | 480 + 620<br>Continuous | 480 + 620<br>Continuous | 480 + 620<br>Continuous | 480 + 620<br>Continuous | All Complied |
| 6.1 | Power Level of Ringing Tone, Busy Tone, Congestion Tone and Number Unobtainable Tone | Combined tone power level shall have nominal value of -10 dBm0 measured with continuous tone (or -16 dBm0 at the MDF) and the values shall be in the range -5 to – 15 dBm0 (or -11 to -21dBm0 at the MDF) | At the local exchange MDF power level of each single frequency tone component is -19 +/- 1 dBm, giving a combined tone power level of -16 +/- 1 dBm | Combined tone power level<br>Ringing Tone : -16 dBm<br>Busy Tone : -21 dBm<br>Congestion tone : -21 dbm<br>Number unobtainable tone : -10 dBm | Combined tone power level is in range -13 dBm to -21 dBm measured at the MDF | Combined tone power level is -13 +/- 1 dBm | Combined tone power level<br><br>Ringing Tone : -16 dBm<br>Busy Tone : -21 dBm<br>Congestion tone : -21 dbm<br>Number unobtainable tone : -21 dBm | New equipment purchased and installed by WT&T and NWT after 1 January 1999 shall comply with the reference value |

## Annex 2 Summary of the Basic Tones of the Fixed Telecommunications Networks in Hong Kong

| Item | Description | Reference Value Adopted by the TA | PCCW-HKT Telephone Ltd. | Wharf T&T Ltd. (WT&T) | Hutchison Global Communications Ltd. (HGC) | New World Telecommunications Ltd. (NWT) | | Remarks |
|---|---|---|---|---|---|---|---|---|
| 6.2 | Power Level of Dial Tone | The absolute power level of combined tone measured at the local exchange MDF shall be in the range of –10 dBm ± 5 dB and level higher than –10 dBm should be avoided | Same as 6.1 | Combined tone power level for dial tone is -10 dBm | Same as 6.1 | Same as 6.1 | Combined tone power level for dial tone is -10 dBm | All Complied |
| 7. | Frequency Tolerance of Tone | +/- 1% | +/- 0.5 % | +/- 0.5 % | +/- 1% | +/- 4Hz | +/- 1% | All Complied |
| 8. | Cadence Tolerance of Tone | +/- 10% | +/- 10% | +/- 10% | + /- 10% | +/ - 10 ms | +/- 10% | All Complied |
| 9. | Harmonic of Tone | Either one of the followings is accepted : -<br>a) less than -50 dBm ; or<br>b) 30 dB below the signal level. | Less than -50 dBm | At least 30 dB below signal level | 30 dB below the signal level for individual frequency components | Less than -55 dBm | At least 30 dB below signal level | All Complied |

## Annex 3 Nominal Pad Settings of the Fixed Telecommunications Networks in Hong Kong

The nominal values of the T and R pads (see clause 6.3.3 of this specification) set by the FTNS operators in Hong Kong are as follows:

| FTNS Operator | T / R |
|---|---|
| PCCW-HKT Telephone Limited | 0 / 6 dB |
| New World Telecommunications Limited | 0 / 6 dB |
| Hutchison Global Communications Limited | 0 / 7 dB |
| Wharf T&T Limited | 2 / 8 dB |

**Annex 4 Characteristics of POTS Splitter for Broadband Type-II Interconnection at the Exchange Side of the Fixed Telecommunications Networks in Hong Kong**

| ***Parameter*** | ***Reference Clause in ITU-T Rec. G.992.1 Annex E*** | ***Performance Requirement*** *(Frequency* | *Limit)* |
|---|---|---|---|
| Insertion Loss | E.1.3 | 1004 Hz | < 1 dB |
| Insertion Loss Distortion | E.1.4 | 250 – 4000 Hz | < +/- 1 dB |
| Return Loss | E.1.2 | 300 Hz<br>1000 Hz<br>2000 Hz<br>3400 Hz | > 14 dB<br>> 18 dB<br>> 18 dB<br>> 14 dB |
| Delay Distortion | E.2.3.1.4 | 200 – 600 Hz<br>600 – 3200 Hz<br>3200 – 4000 Hz | < 250 µs<br>< 200 µs<br>< 250 µs |
| Longitudinal Balance | E.2.3.2.1 | 200 – 1000 Hz<br>3000 Hz | > 58 dB<br>> 53 dB |
| ADSL Band Attenuation | E.2.4.1 | 32 – 300 kHz<br>300 – 1104 kHz | > 65 dB<br>> 55 dB |
| Loading of ADSL Signal Path | E.2.4.2 | 30 – 1104 kHz | < 0.25 dB |
| Capacitance in Idle State | E.2.3.3.1 | 20 – 30 Hz | < 0.3 µF |
| DC Resistance with U-interface Open | E.2.2 | | > 5 M ohms |
| DC Resistance with U-interface Shorted | E.2.2 | | < 25 ohms |

NOTE:

1. For measurement of loss or loss distortion, a matching impedance of 600 ohms shall be used for termination.
2. The method of measurement shall follow that specified in the corresponding reference clause in the ITU-T recommendation.
3. For Capacitance in idle state, some legacy equipment may have a value of up to 0.5 µF.